# Preface

## About SunFounder

SunFounder is a technology company focused on Raspberry Pi and Arduino open source community development. Committed to the promotion of open source culture, we strive to bring the fun of electronics making to people all around the world and enable everyone to be a maker. Our products include learning kits, development boards, robots, sensor modules and development tools. In addition to high quality products, SunFounder also offers video tutorials to help you build your own project. If you have interest in open source or making something cool, welcome to join us! Visit www.sunfounder.com for more!

## About This Kit

The kit is suitable for the SunFounder Uno, SunFounder Mega 2560, SunFounder Duemilanove, and SunFounder Nano. All code found in the user guide is compatible with these boards.

Our SunFounder board is fully compatible with Arduino.

With this kit, you can learn some simple experiments at first, like lighting up an LED, and then some complicated experiments. For example, make some experiments about modules. By learning this kit, you can apply Arduino from entry to proficiency.

In this book, we will show you circuits with both realistic illustrations and schematic diagrams. You can go to our official website www.sunfounder.com to download related materials (code, Fritzing figures and user manual in PDF) by clicking LEARN -> Get Tutorials.

**Note:**

This kit is the newest version optimized based on the previous. We have made the following modifications:

1. Added components list so that you can easily recognize the components in this kit.
2. Replaced some modules.
3. Replaced LCD1602 with I2C LCD1602, thus you only need to connect four wires.
4. Clearer breadboard pictures, schematic diagrams and physical maps are used.
5. Improved the content of the manual.
6. Removed Prototype shield which would not be used in this manual.
7. Replaced all colorless transparent LEDs with colored LEDs so that you can recognize the color of each LED without test.

If you have any questions, please send an email to support@sunfounder.com. You can also leave a message and share your projects on our Forum.

Reprint 2.0

SunFounder

# Contents

Components List ..... 1
Notice ..... 7
Lesson 1 Controlling LED by Button ..... 9
Lesson 2 Controlling LED by PWM ..... 13
Lesson 3 Interactive LED Flowing Lights ..... 17
Lesson 4 I2C LCD1602 ..... 19
Lesson 5 Buzzer ..... 22
Lesson 6 Tilt-Switch ..... 25
Lesson 7 Building a Quiz Buzzer System ..... 28
Lesson 8 Serial Monitor ..... 31
Lesson 9 Photoresistor ..... 35
Lesson 10 Controlling Buzzer by Photoresistor ..... 38
Lesson 11 Voltmeter ..... 41
Lesson 12 LM35 Temperature Sensor ..... 43
Lesson 13 7-Segment Display ..... 45
Lesson 14 Stopwatch ..... 50
Lesson 15 RGB LED ..... 53
Lesson 16 74HC595 ..... 55
Lesson 17 Relay Module ..... 59
Lesson 18 Stepper Motor ..... 62
Lesson 19 Servo ..... 67
Lesson 20 Joystick PS2 ..... 70
Lesson 21 Infrared-Receiver ..... 73

SunFounder

# Components List

| No. | Name | Qty. | Component |
|---|---|---|---|
| 1 | I2C LCD1602 | 1 | |
| 2 | RGB Module | 1 | 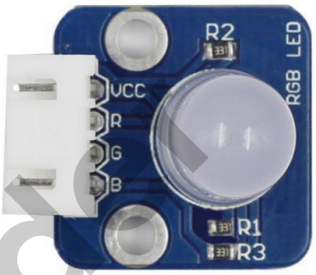 |
| 3 | 3*AAA Battery Holder | 1 | |
| 4 | Jumper wire (Male to Male) | 30 | |

SunFounder

| | | | |
|---|---|---|---|
| 5 | Breadboard | 1 | 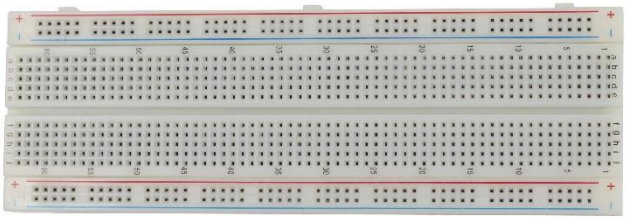 |
| 6 | USB Cable | 1 | |
| 7 | LED (red) | 8 | |
| 8 | LED (green) | 5 | |
| 9 | LED (yellow) | 5 | |
| 10 | Resistor (220Ω) | 8 | (red, red, black, black, brown) |

SunFounder

| | | | |
|---|---|---|---|
| 11 | Resistor (1KΩ) | 4 | (brown, black, black, brown, brown) |
| 12 | Resistor (10KΩ) | 4 | (brown, black, black, red, brown) |
| 13 | DuPont wire (M to F) | 15 | |
| 14 | Potentiometer (50K) | 1 | 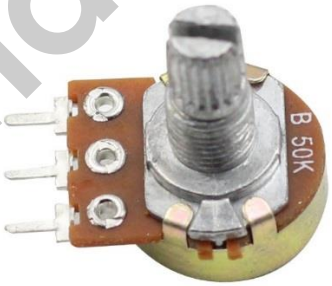  |
| 15 | Active Buzzer | 1 | |
| 16 | Passive Buzzer | 1 | |

SunFounder

| | | | |
|---|---|---|---|
| 17 | 74HC595 | 2 | 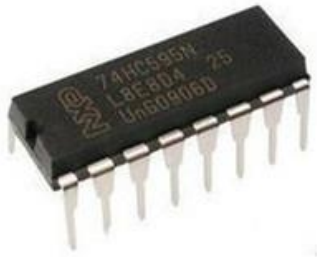 |
| 18 | IR Receiver | 1 | 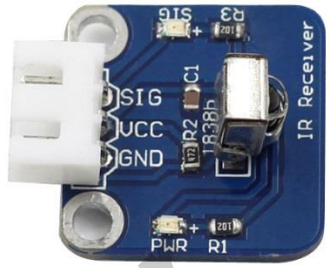  |
| 19 | LM35 | 2 | |
| 20 | Photoresistor | 2 | |
| 21 | Remote Control | 1 | |
| 22 | Four-digit Segment Display | 1 | |

SunFounder

| | | | |
|---|---|---|---|
| 23 | Stepper Motor | 1 | |
| 24 | Stepper Motor Driver | 1 | |
| 25 | Servo | 1 | |
| 26 | Relay Module | 1 | |
| 27 | One-digit Segment Display | 2 | 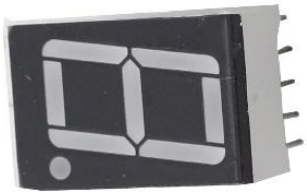 |
| 28 | Joystick PS2 | 1 | 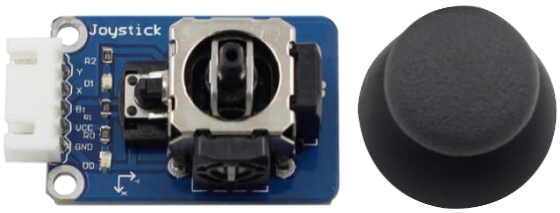  |

SunFounder

| | | | |
|---|---|---|---|
| 29 | Button | 5 | |
| 30 | Tilt Switch | 2 | |
| 31 | 5-Pin Anti-reverse Cable | 2 | |
| 32 | 4-Pin Anti-reverse Cable | 2 | |
| 33 | 3-Pin Anti-reverse Cable | 2 | |

SunFounder

# Notice

All the experiments in this kit are done with SunFounder Uno R3 board, but they also compatible with SunFounder Mega 2560, SunFounder Nano and all official Arduino Boards. All the code included in this kit works with these boards.

So what does COMPATIBLE mean here? It means you can use any of the three boards to do the same experiment with the same wiring. Take turning on an LED as an example. We use SunFounder Uno as microcontroller, but you can also use SunFounder Nano or SunFounder Mega 2560 to serve the same function. Just select the right Board and COM when compiling, as shown below:

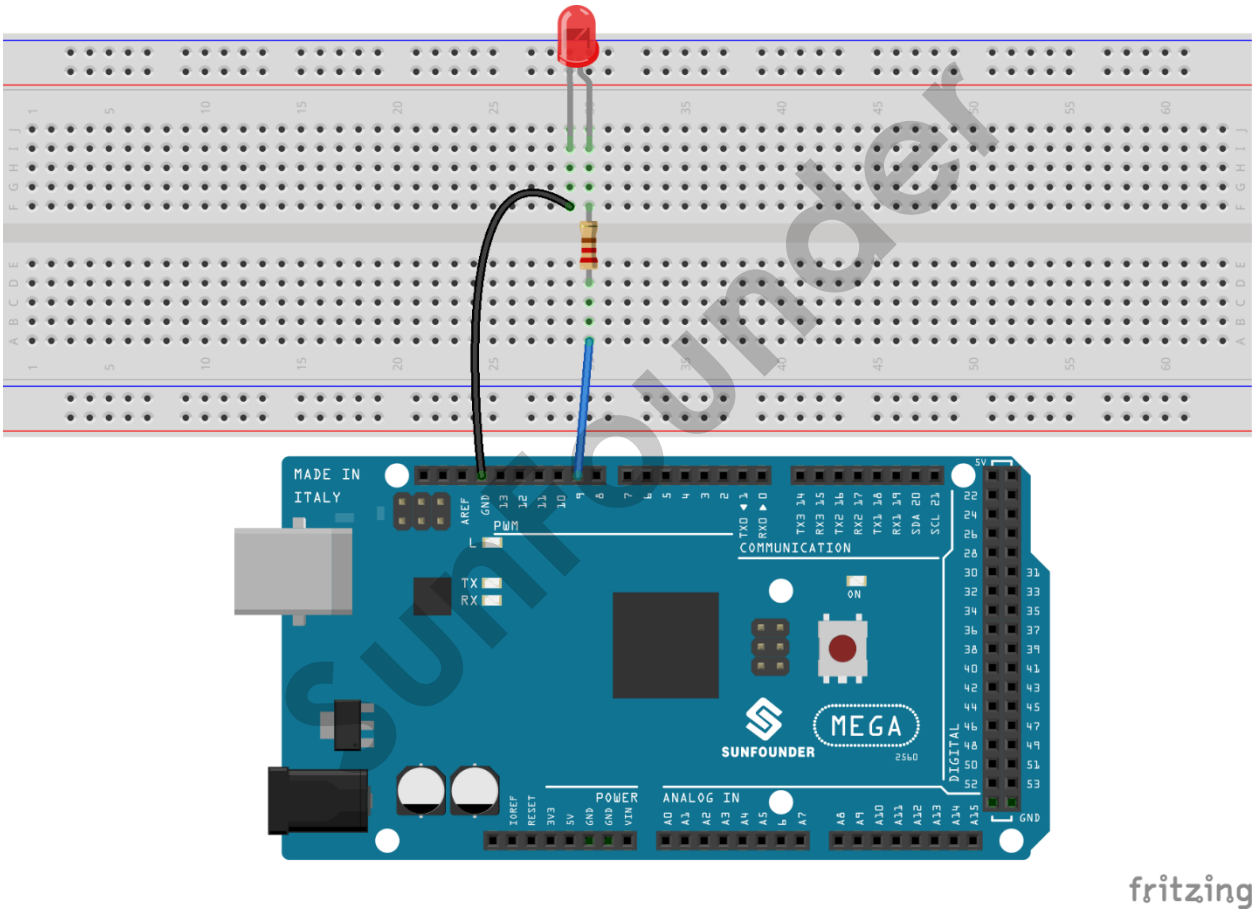

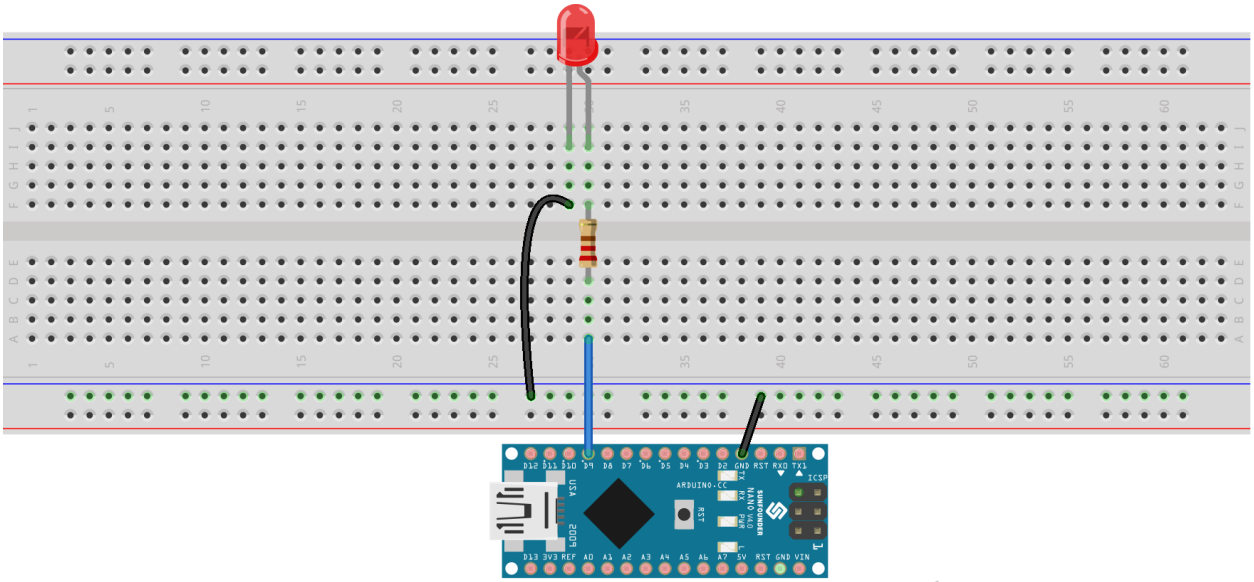

fritzing

SunFounder Mega 2560 R3

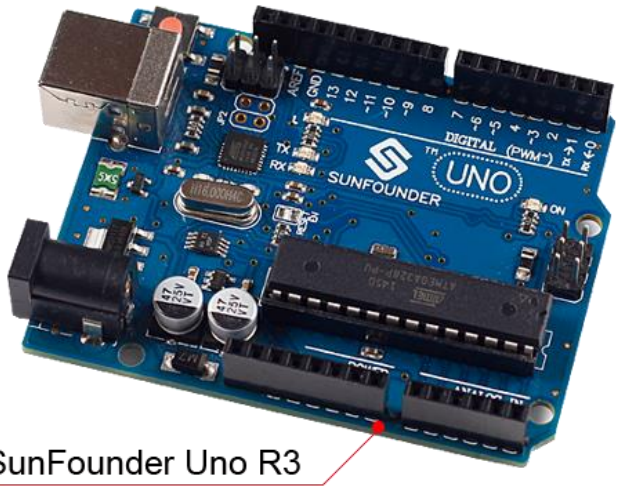


SunFounder Uno R3

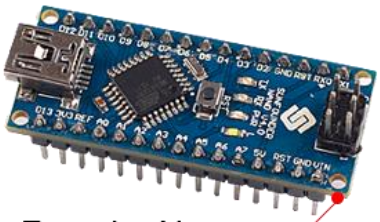

SunFounder Nano

SunFounder

# Lesson 1 Controlling LED by Button

## Introduction

In this experiment, you will learn how to turn on/off an LED by using an I/O port and a button. The "I/O port" refers to the INPUT and OUTPUT port. Here the INPUT port of the SunFounder Uno board is used to read the output of an external device. Since the board itself has an LED (connected to Pin 13), so you can use this LED to do this experiment for convenience.

## Components

- 1 * SunFounder Uno board
- 1 * USB cable
- 1 * Button
- 1 * Resistor (10kΩ)
- Jumper wires
- 1 * Breadboard

## Principle

### Button

Buttons are a common component used to control electronic devices. They are usually used as switches to connect or disconnect circuits. Although buttons come in a variety of sizes and shapes, the one used here is a 6mm mini-button as shown in the following pictures. Pins pointed out by the arrows of same color are meant to be connected.

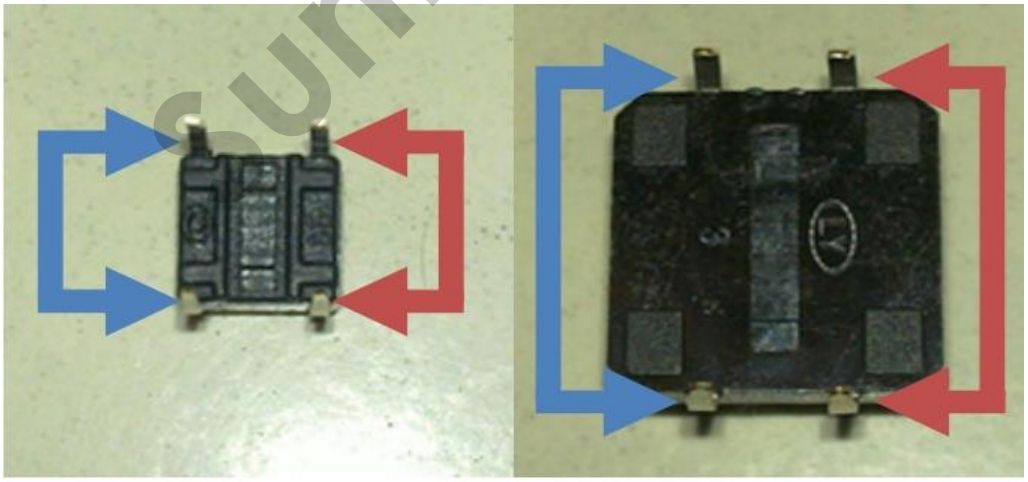

SunFounder

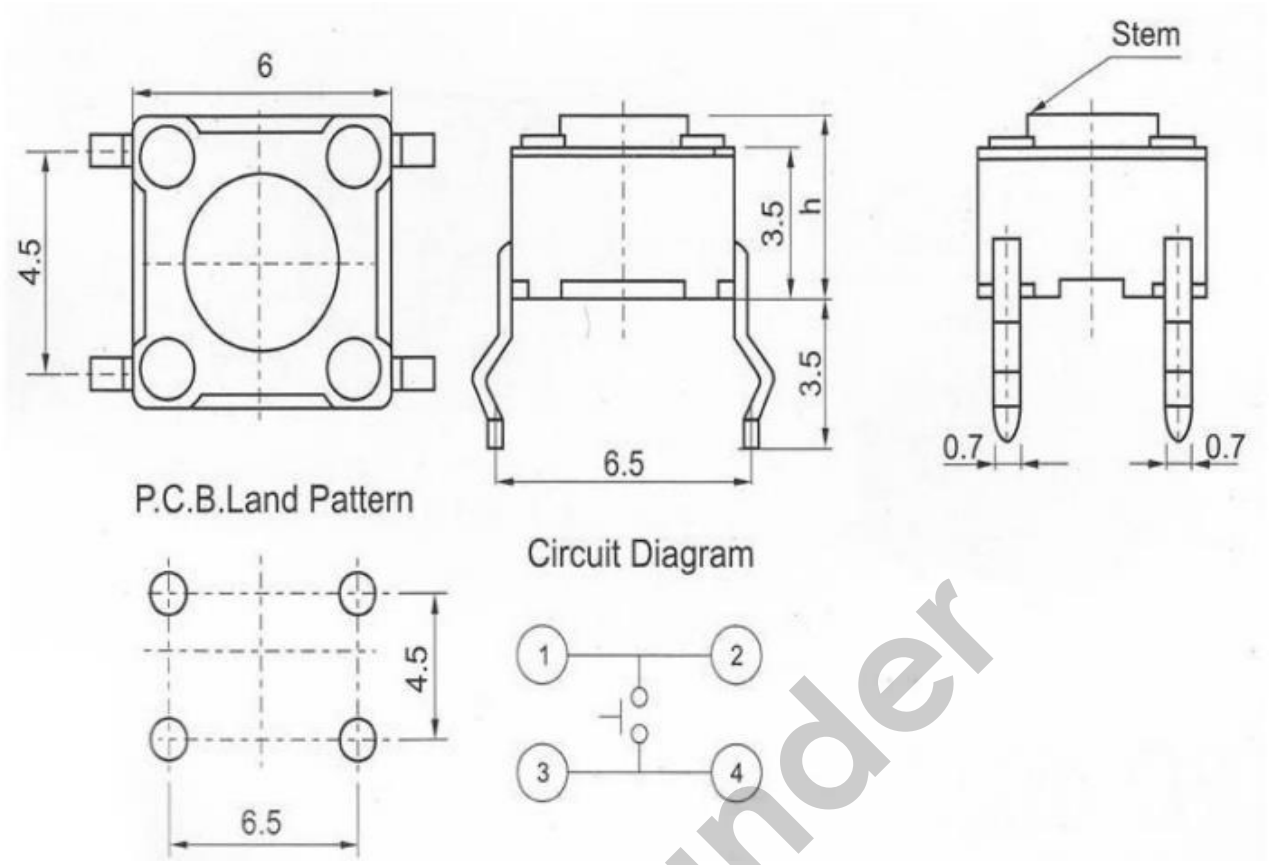


When the button is pressed, the pins pointed by the blue arrows will connect to the pins pointed by the red arrows.

Generally, the button is directly connected in an LED circuit in order to turn on or off the LED. This connection is relatively simple. However, sometimes the LED will light up automatically without pressing the button, which is caused by various interferences. In order to avoid these external interferences, a pull-down resistor is used, that is, to connect a 1K–10KΩ resistor between the button port and GND. It is used to consume external interferences while connected to GND for as long as the button switch is turned off.

This circuit connection is widely used in numerous circuits and electronic devices. For example, if you press any button on your mobile phone, the backlight will light up.

SunFounder

## Experimental Procedures

**Step 1:** Build the circuit

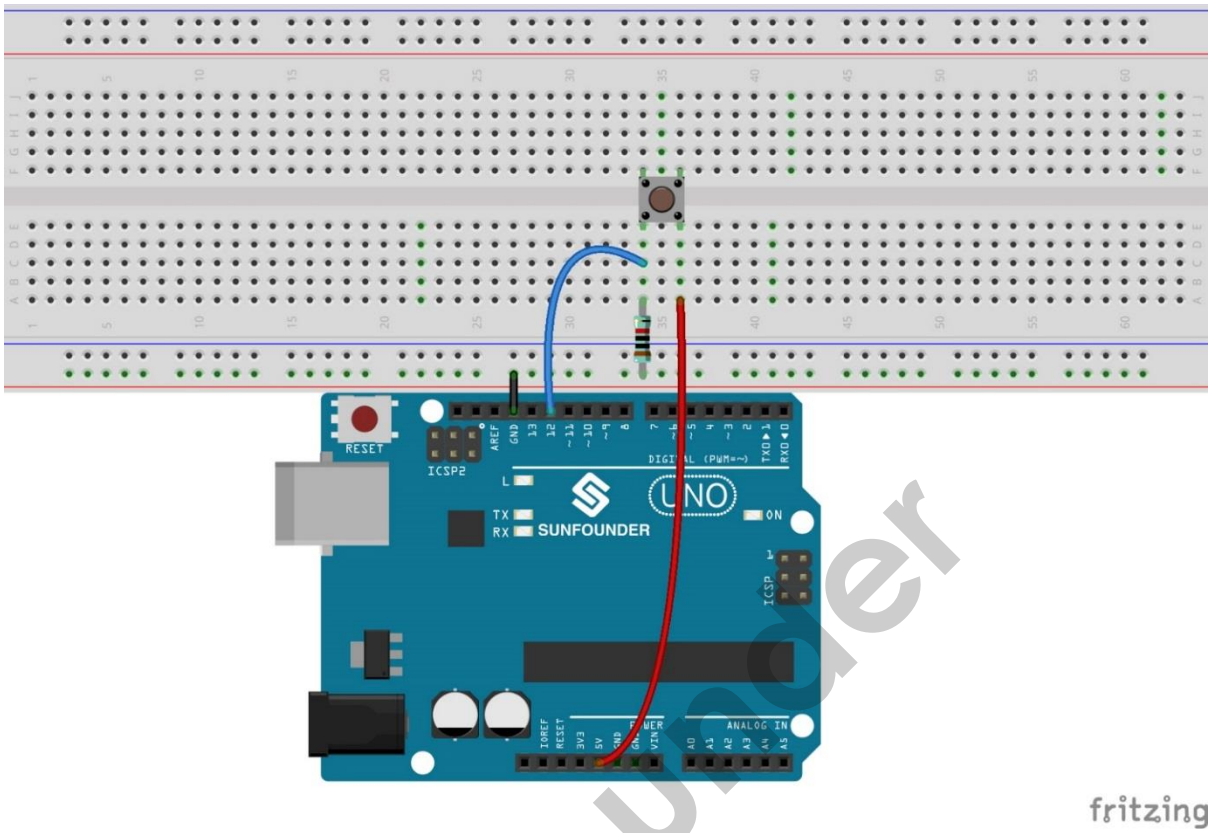


The schematic diagram

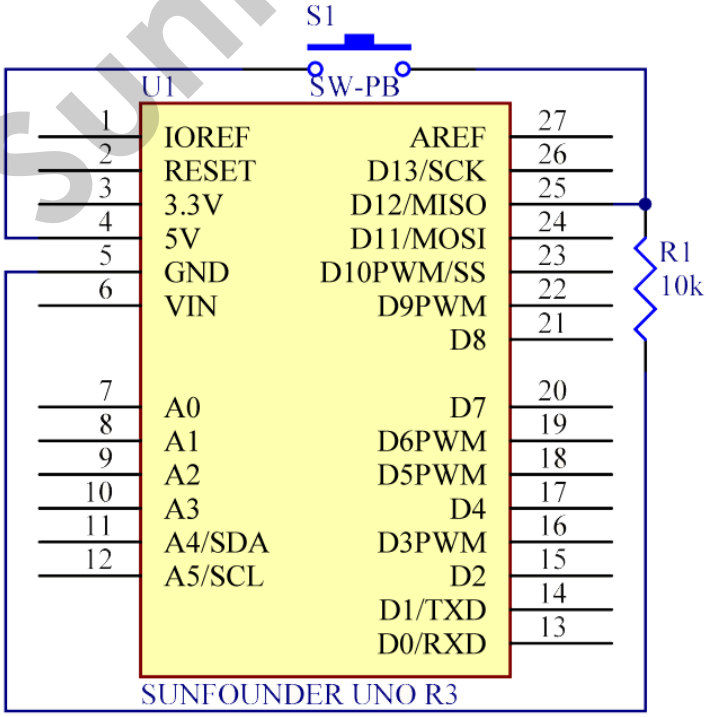


SunFounder

**Step 2:** Program (Please refer to the example code in LEARN -> Get Tutorials on our website)
**Step 3:** Compile the code
**Step 4:** Upload the sketch to the SunFounder Uno board

Now, press the button, and the LED on the SunFounder Uno board will light up.

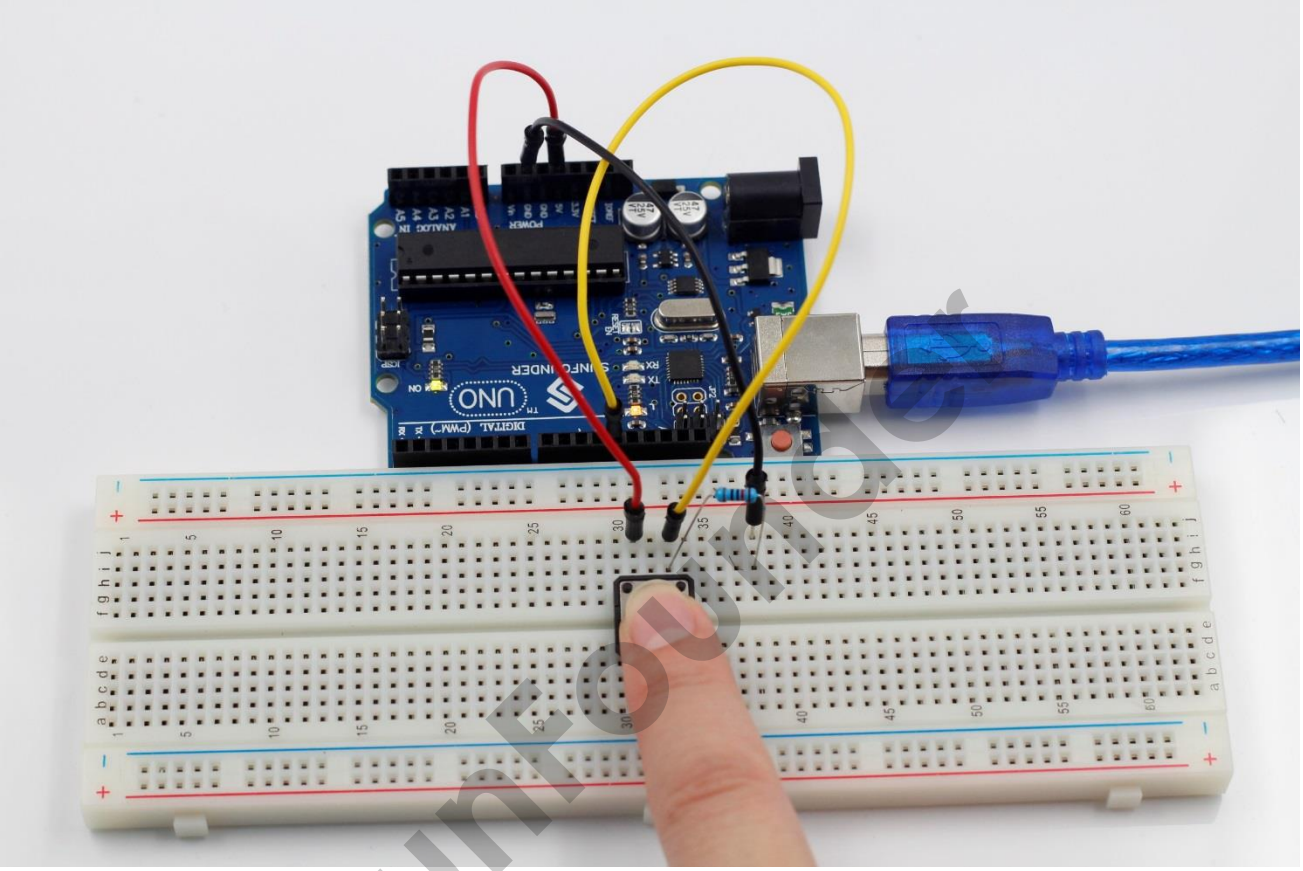


SunFounder

# Lesson 2 Controlling LED by PWM

## Introduction

In this lesson, let's try something a little easier – gradually changing the luminance of an LED through programming. Since the pulsing light looks like breathing, we give it a magical name - breathing LED. We'll accomplish this effect with pulse width modulation (PWM).

## Components

- 1 * SunFounder Uno board
- 1 * Breadboard
- Jumper wires
- 1 * LED
- 1 * Resistor (220Ω)
- 1 * USB cable

## Principle

### PWM

Pulse width modulation, or PWM, is a technique for getting analog results with digital means. Digital control is used to create a square wave, a signal switched between on and off. This on-off pattern can simulate voltages in between full on (5 Volts) and off (0 Volts) by changing the portion of the time the signal spends on versus the time that the signal spends off. The duration of "on time" is called the pulse width. To get varying analog values, you change, or modulate, that pulse width. If you repeat this on-off pattern fast enough with an LED for example, the result is as if the signal is a steady voltage between 0 and 5V controlling the brightness of the LED. (See the PWM description on the official website of Arduino).

SunFounder

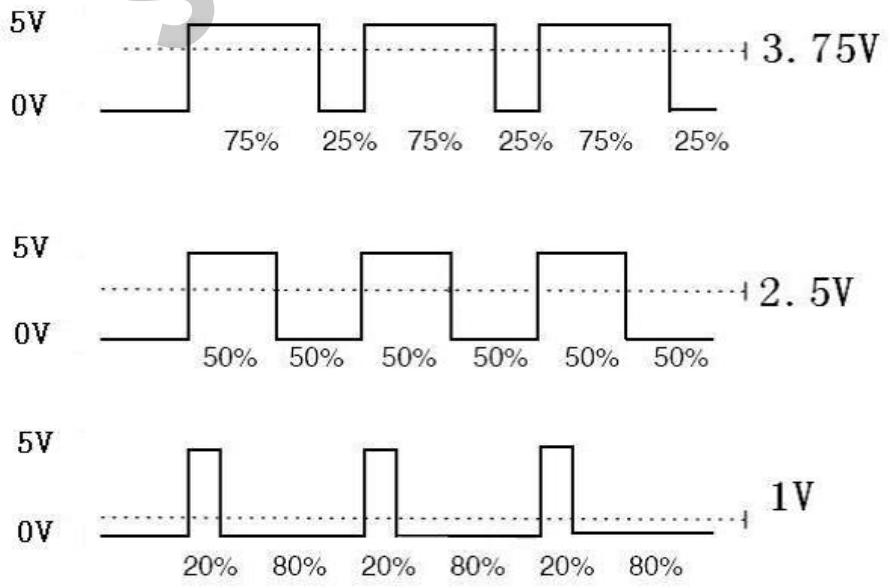

We can see from the top oscillogram that the amplitude of the DC voltage output is 5V. However, the actual voltage output is only 3.75V through PWM because the high level only takes up 75% of the total voltage within a period.

Here is an introduction to the three basic parameters of PWM:

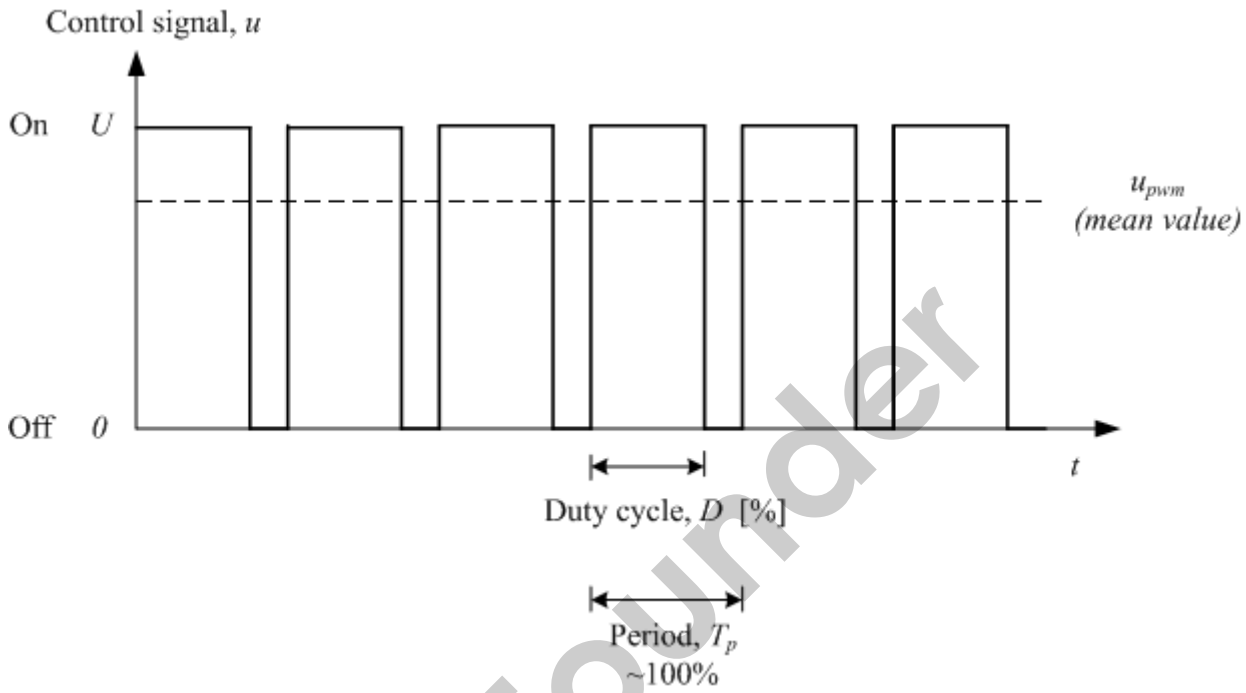


1. **Duty cycle** describes the proportion of "on" time to the regular interval or period of time.
2. **Period** describes the reciprocal of pulses in one second.
3. The voltage amplitude here is 0V–5V.

SunFounder

**Experimental Procedures**

**Step 1:** Build the circuit

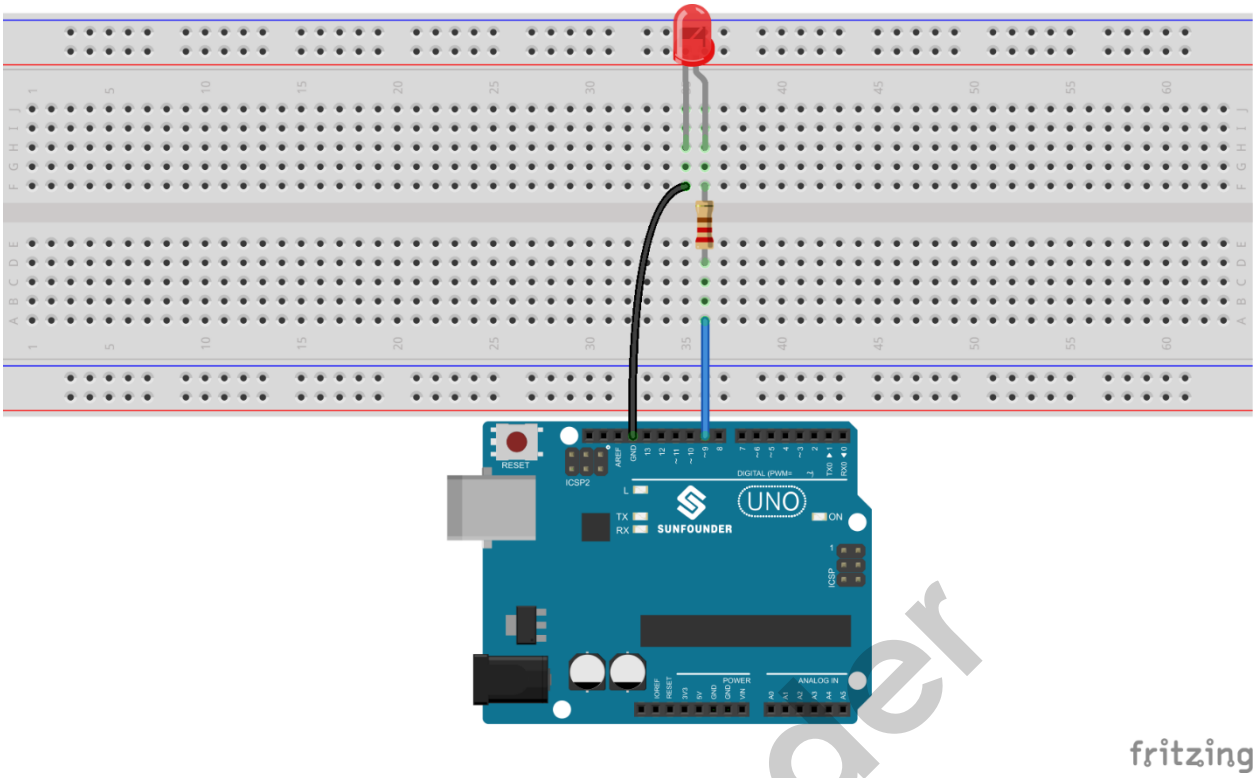


The schematic diagram

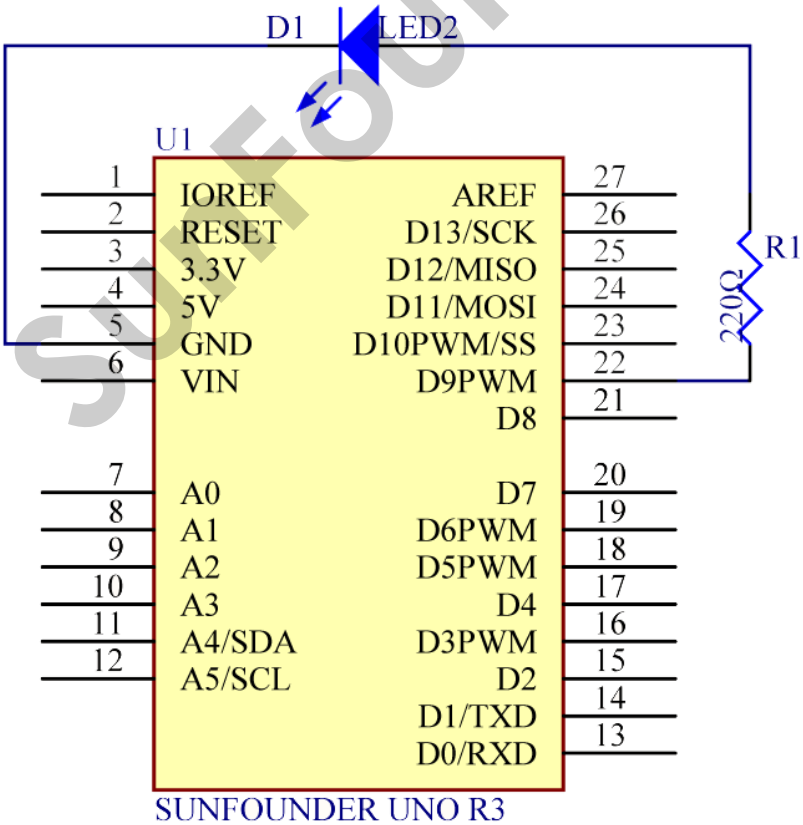


SunFounder

**Step 2:** Program (Please refer to the example code in LEARN -> Get Tutorials on our website)

**Step 3:** Compile the code

**Step 4:** Upload the sketch to the SunFounder Uno board

Here you should see the LED gets brighter and brighter, and then slowly dimmer, just like breathing.

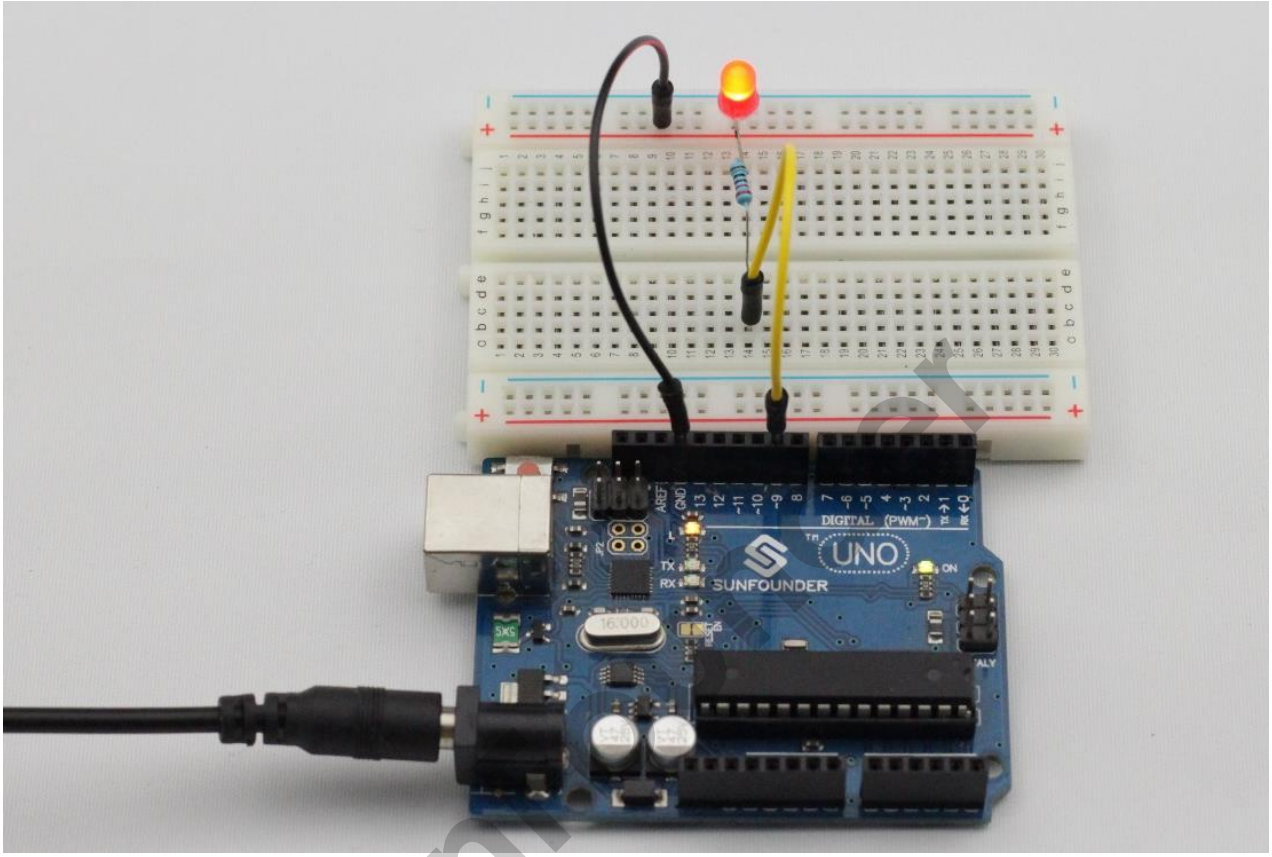

# Lesson 3 Interactive LED Flowing Lights

## Introduction

You have learnt how to make flowing LED lights in Super Kit. In this lesson, a potentiometer is added on that basis to change the interval of LED flashing by adjusting the potentiometer.

## Components

- 1* SunFounder Uno board
- 1 * Breadboard
- 8 * LED
- 8 * Resistor (220Ω)
- 1 * Potentiometer
- 1 * USB cable
- Several jumper wires

## Experimental Principle

The principle is quite simple, that is, to turn eight LEDs on in turn. And then change the time interval of LED on and off by adjusting the potentiometer.

## Experimental Procedures

**Step 1:** Build the circuit

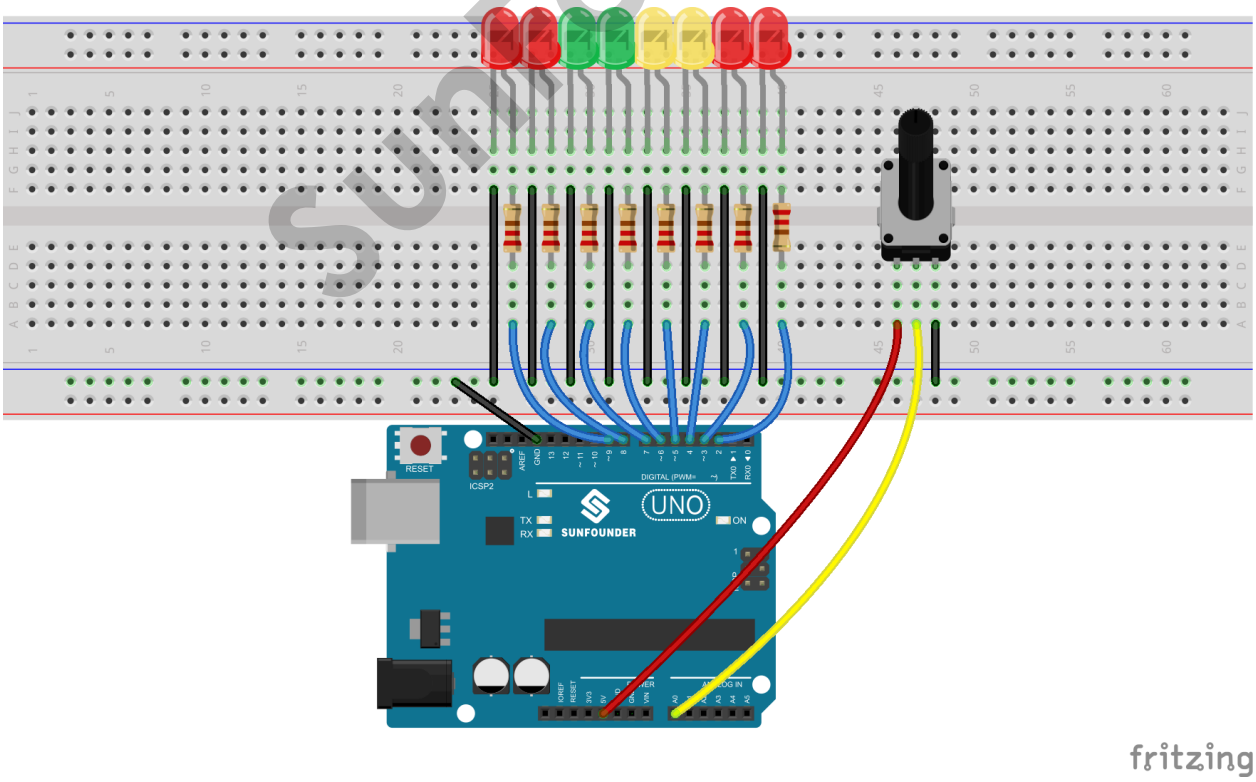


SunFounder

The schematic diagram

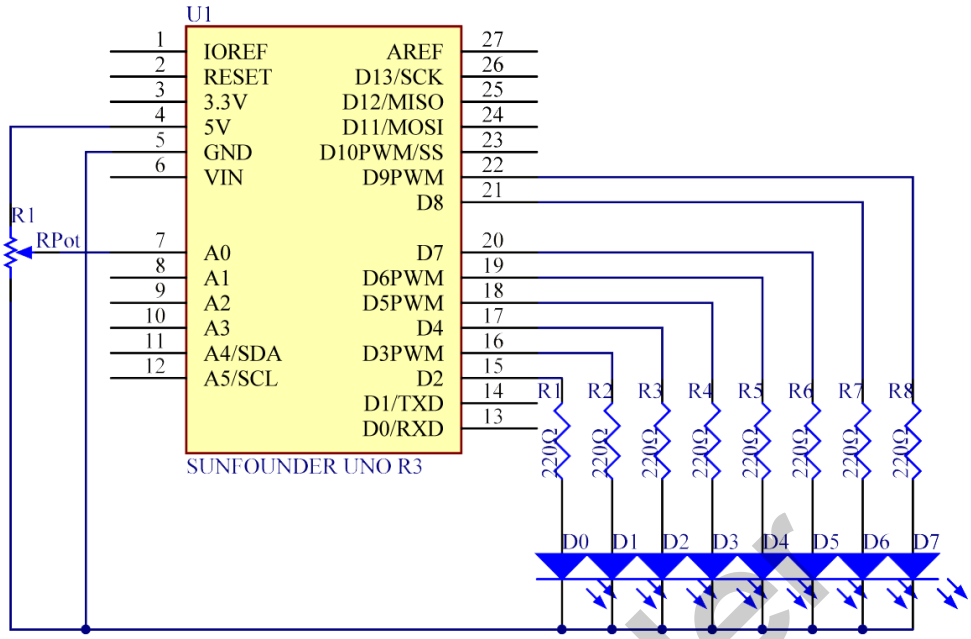


**Step 2:** Program (Please refer to the example code in LEARN -> Get Tutorials on our website)

**Step 3:** Compile the code

**Step 4:** Upload the sketch to the SunFounder Uno board

Here you should see eight LEDs light up one by one in turn. Adjust the potentiometer, and you will find the time interval of LED lighting up changes.

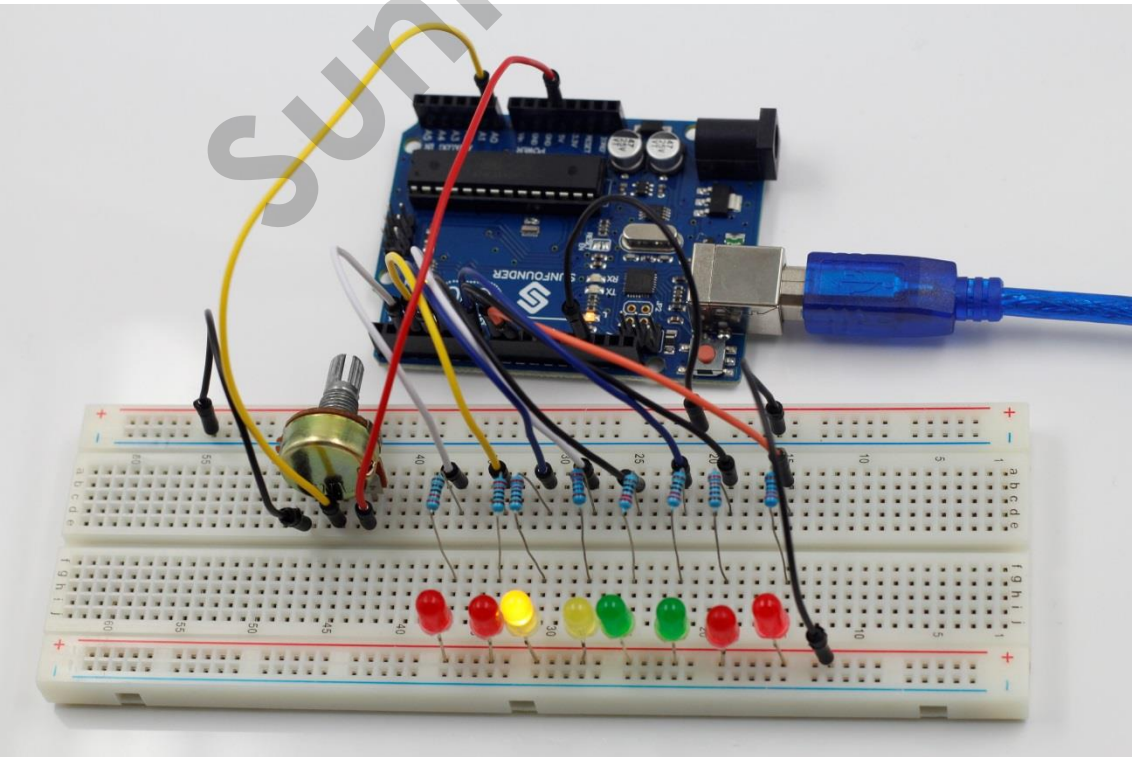

SunFounder

# Lesson 4 I2C LCD1602

## Introduction

As we all know, though LCD and some other displays greatly enrich the man-machine interaction, they share a common weakness. When they are connected to a controller, multiple IOs will be occupied of the controller which has no so many outer ports. Also it restricts other functions of the controller. Therefore, LCD1602 with an I2C bus is developed to solve the problem.

I2C bus is a type of serial bus invented by PHLIPS. It is a high performance serial bus which has bus ruling and high or low speed device synchronization function required by multiple-host system. The blue potentiometer on the I2C LCD1602 (see the figure below) is used to adjust the backlight for better display. I²C uses only two bidirectional open-drain lines, Serial Data Line (SDA) and Serial Clock Line (SCL), pulled up with resistors. Typical voltages used are +5 V or +3.3 V although systems with other voltages are permitted.

## Components

- 1 * SunFounder Uno board
- 1 * I2C LCD1602 module
- 1 * USB cable
- Several jump wires

## Experimental Principle

In this experiment, we will let I2C LCD1602 display "SunFounder" and "hello, world" by programming.

## Experimental Procedures

**Step 1:** Build the circuit

The connection between the I2C LCD1602 and the SunFounder Uno board:

| I2C LCD1602 | SunFounder Uno |
|---|---|
| GND | GND |

SunFounder

| | |
|---|---|
| VCC | 5V |
| SDA | A4 |
| SCL | A5 |

Note: The wiring of I2C LCD1602 is the same through the following lessons.

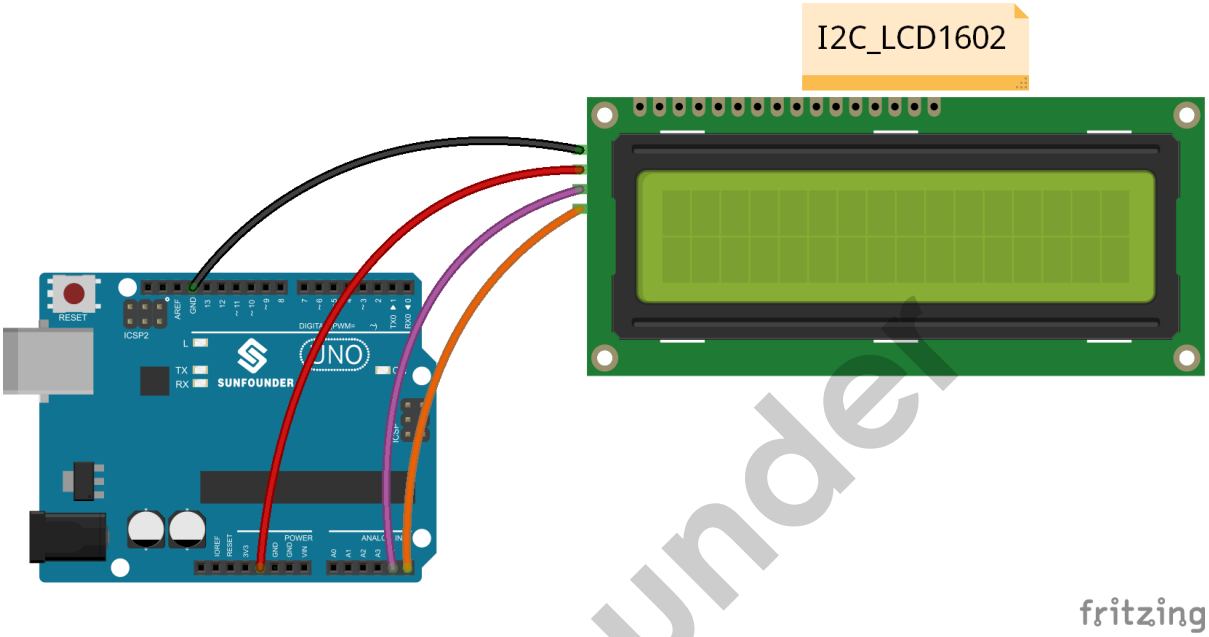


**Step 2:** Program (Please refer to the example code in LEARN -> Get Tutorials on our website)

**Step 3:** Since in some code, the libraries needed are not included in Arduino, so you need to add them before compiling. Unzip the downloaded file. Copy the folders under the **Library** folder to the ***libraries*** folder in Arduino (if you cannot find the path in Arduino, open Arduino IDE, click **File** ->**Preferences**, and you can see the path in the **Browse** box, as shown in the following diagram). Compile the program.

SunFounder

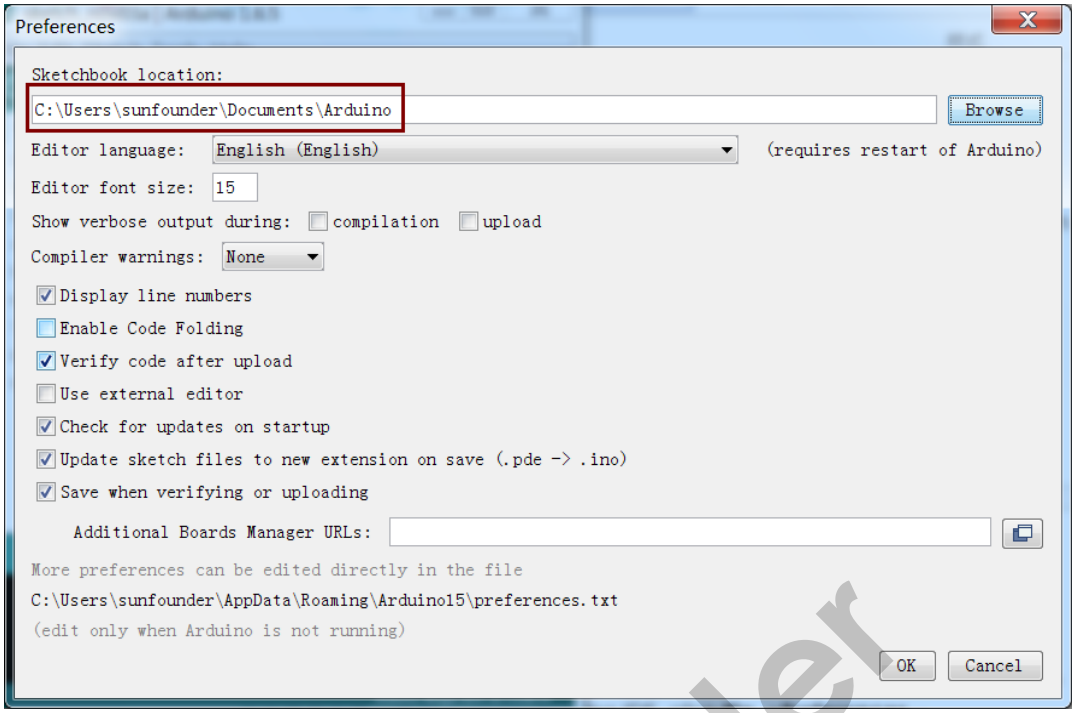


**Step 4:** Upload the sketch to the SunFounder Uno board

You should now see your I2C LCD1602 display the flowing characters: "SunFounder" and "hello, world".

SunFounder

# Lesson 5 Buzzer

## Introduction

A buzzer is a great tool in your experiments whenever you want to make some sounds. .

## Components

- 1 * SunFounder Uno board
- 1 * Breadboard
- 1 * USB data cable
- 1 * Buzzer (Active)
- Jumper wires

## Experimental Principle

As a type of electronic buzzer with an integrated structure, buzzers, which are supplied by DC power, are widely used in computers, printers, photocopiers, alarms, electronic toys, automotive electronic devices, telephones, timers and other electronic products for voice devices. Buzzers can be categorized as active and passive ones (see the following picture). Turn the pins of two buzzers face up, and the one with a green circuit board is a passive buzzer, while the other enclosed with a black tape is an active one.

SunFounder

The difference between an active buzzer and a passive buzzer:

An active buzzer has a built-in oscillating source, so it will make sounds when electrified. But a passive buzzer does not have such source, so it will not tweet if DC signals are used; instead, you need to use square waves whose frequency is between 2K and 5K to drive it. The active buzzer is often more expensive than the passive one because of multiple built-in oscillating circuits.

In this experiment, we use an active buzzer.

## Experimental Procedures

**Step 1:** Build the circuit

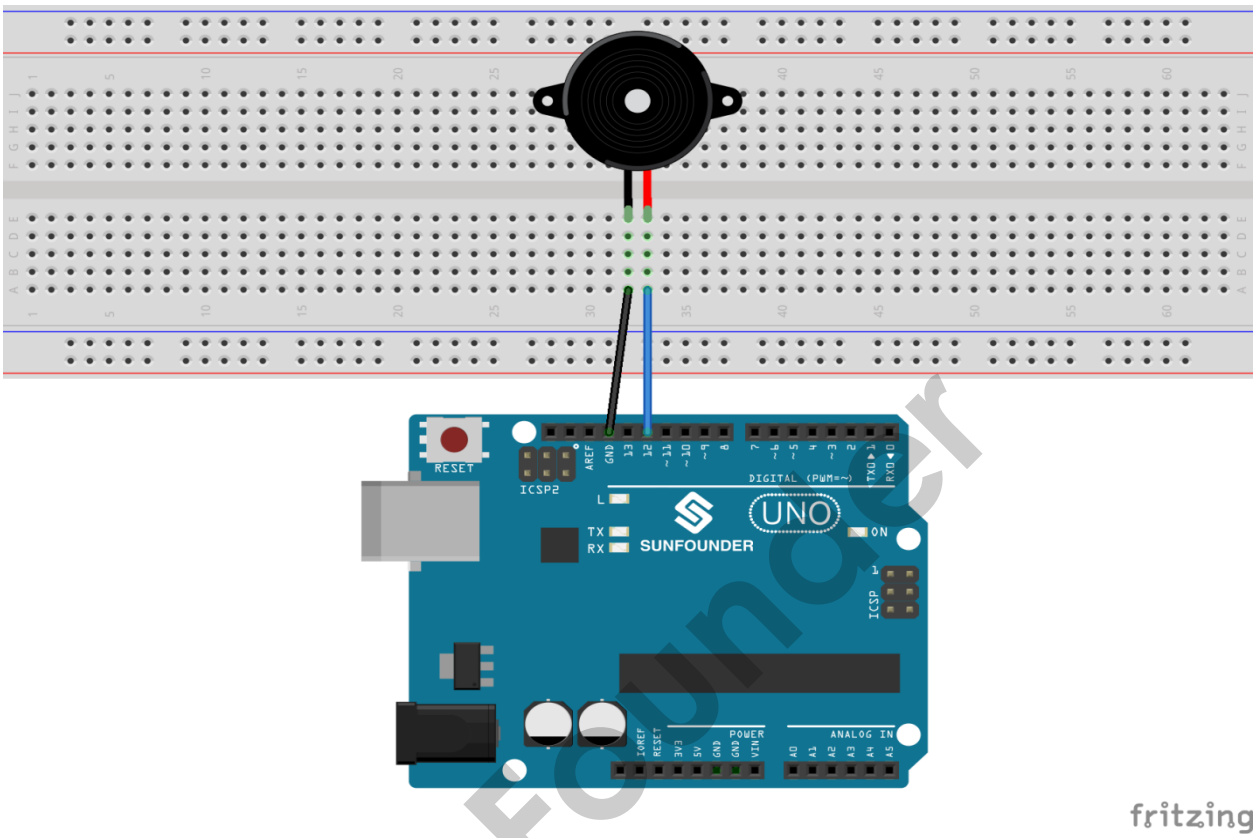


The schematic diagram

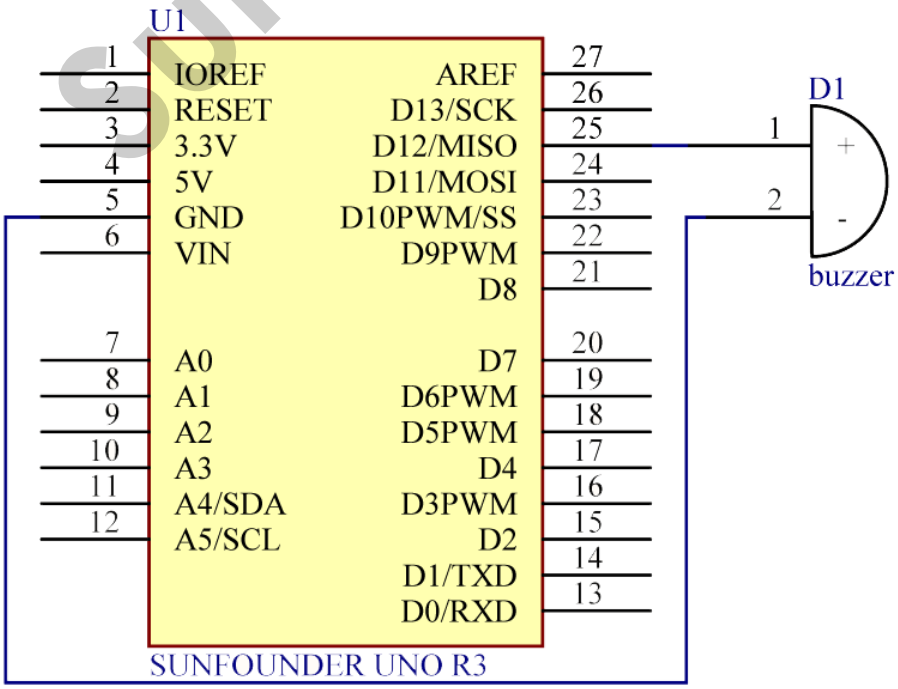


SunFounder

**Step 2:** Program (Please refer to the example code in LEARN -> Get Tutorials on our website)
**Step 3:** Compile the code
**Step 4:** Upload the sketch to the SunFounder Uno board

Now, you should hear the buzzer beep.

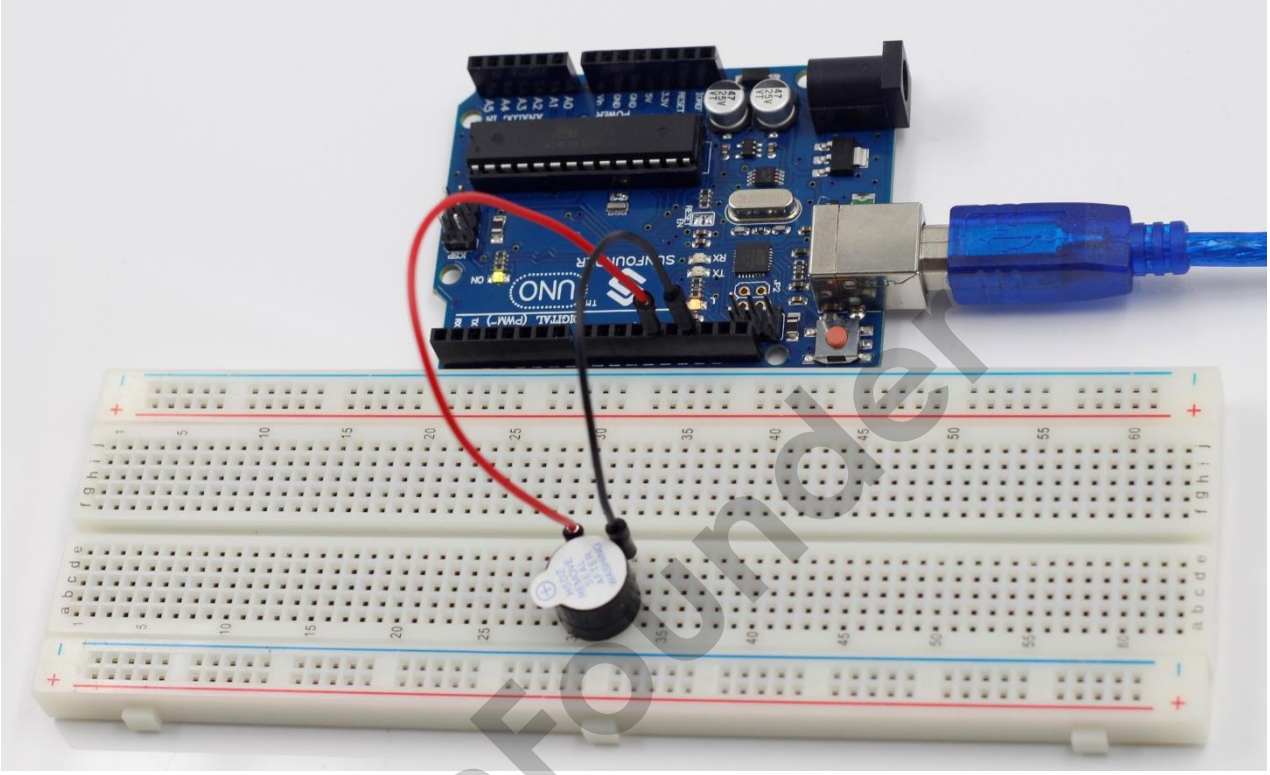

SunFounder

# Lesson 6 Tilt-Switch

**Introduction**

The tilt switch used here is a ball one with a metal ball inside. It is used to detect small angle of inclination.

**Components**

- 1 * SunFounder Uno board
- 1 * USB data cable
- 1 * Tilt switch
- Several jumper wires

**Experimental Principle**

The principle is very simple. When the switch is tilted in a certain angle, the ball inside rolls down and touches the two contacts connected to the pins outside, thus triggering circuits. Otherwise the ball will stay away from the contacts, thus breaking the circuits.

SunFounder

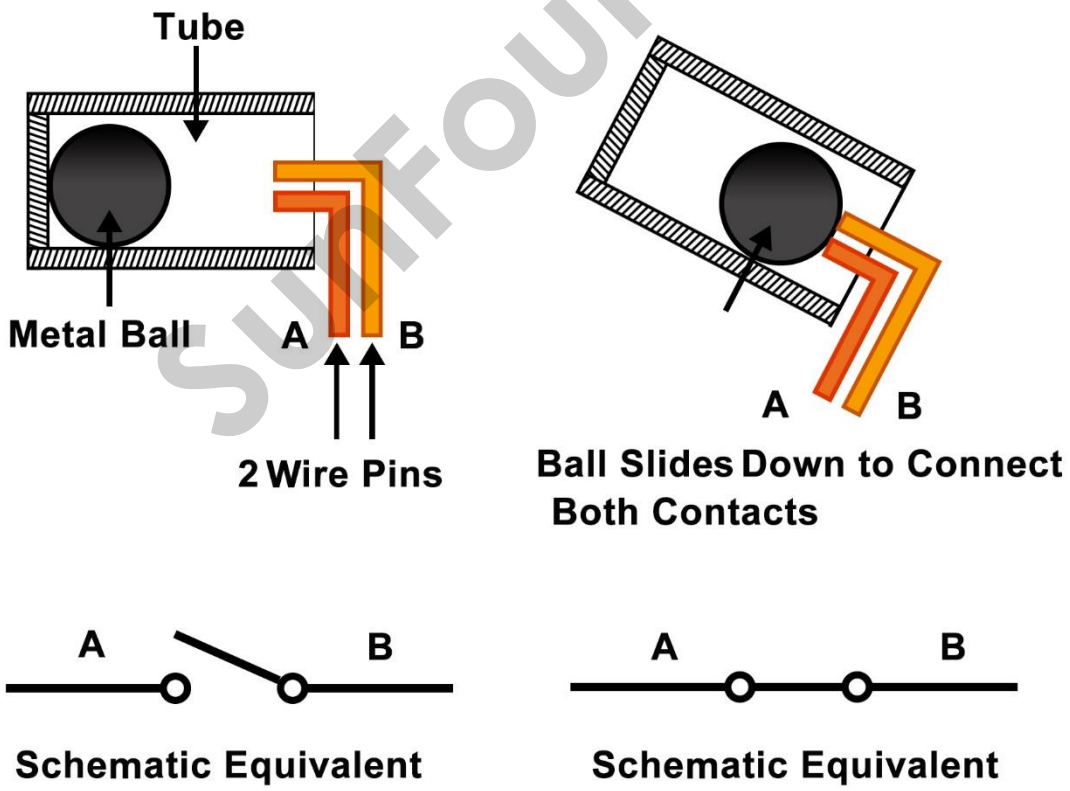

**Experimental Procedures**

Step 1: Build the circuit

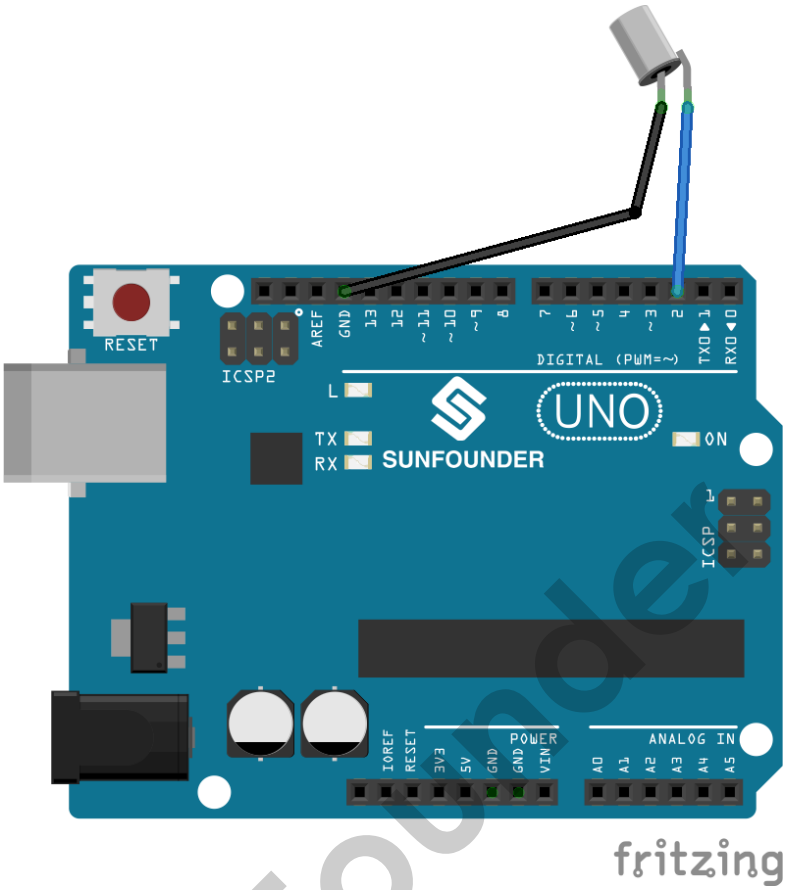


The schematic diagram

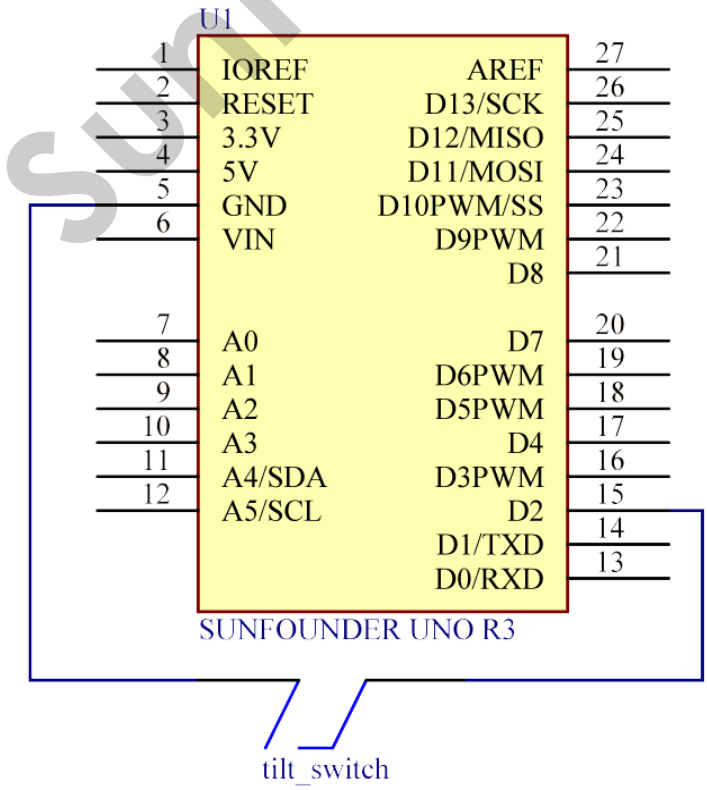


SunFounder

**Step 2:** Program (Please refer to the example code in LEARN -> Get Tutorials on our website)
**Step 3:** Compile the code
**Step 4:** Upload the sketch to the SunFounder Uno board

Now, tilt the switch, and the LED attached to pin 13 on SunFounder Uno board will light up.

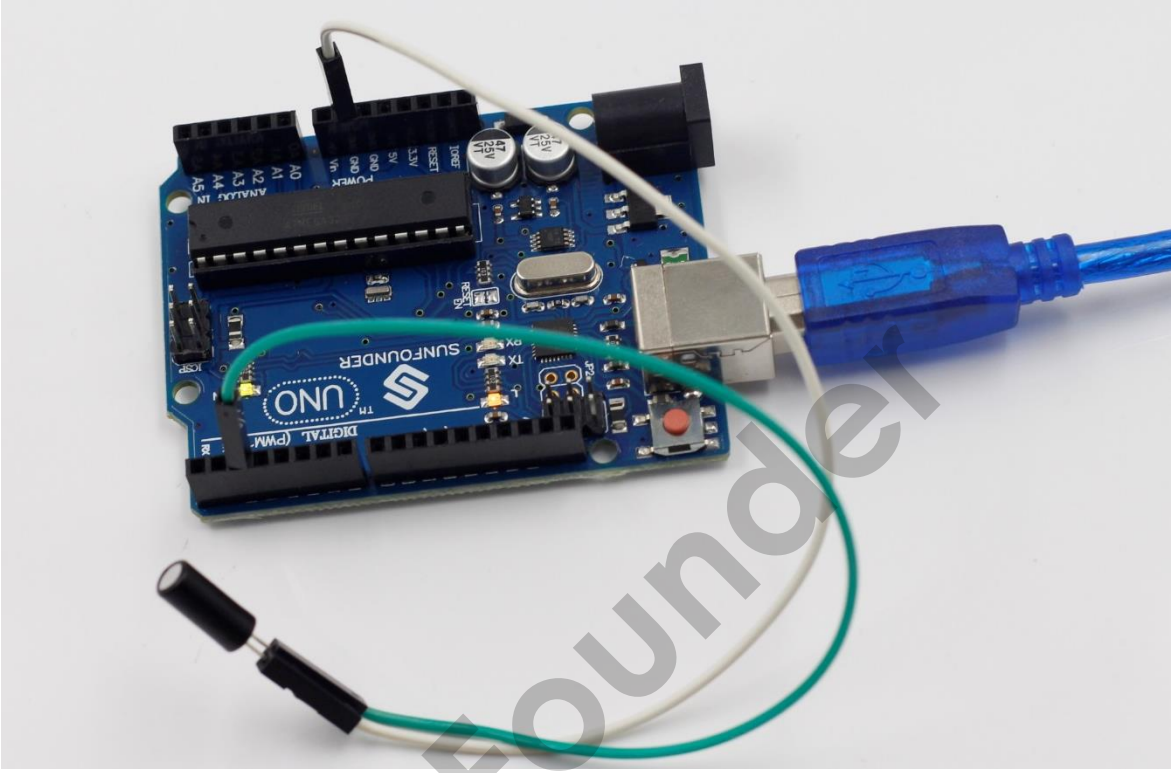


SunFounder

# Lesson 7 Building a Quiz Buzzer System

## Introduction

In quiz shows, especially entertainment activities (e.g. competitive answering activities), organizers often apply a buzzer system in order to accurately, fairly and visually determine the seat number of a responder.

Now the system can illustrate the accuracy and equity of the judgment by data, which improves the entertainment. At the same time, it is more fair and just. In this lesson, we will use some buttons, buzzers, and LEDs to make a quiz buzzer system.

## Components

- 1* SunFounder Uno board
- 1 * USB data cable
- 4 * Button
- 4 * LED
- 4 * Resistor (220Ω)
- 1 * Active Buzzer
- Several jumper wires
- 1 * Breadboard

## Experimental Principle

Button 1, 2 and 3 are answer buttons, and button 4 is the reset button. If button 1 is pressed first, the buzzer will beep, the corresponding LED will light up and all the other LEDs will go out. If you want to start another round, press button 4 to reset.

SunFounder

## Experimental Procedures

**Step 1:** Build the circuit

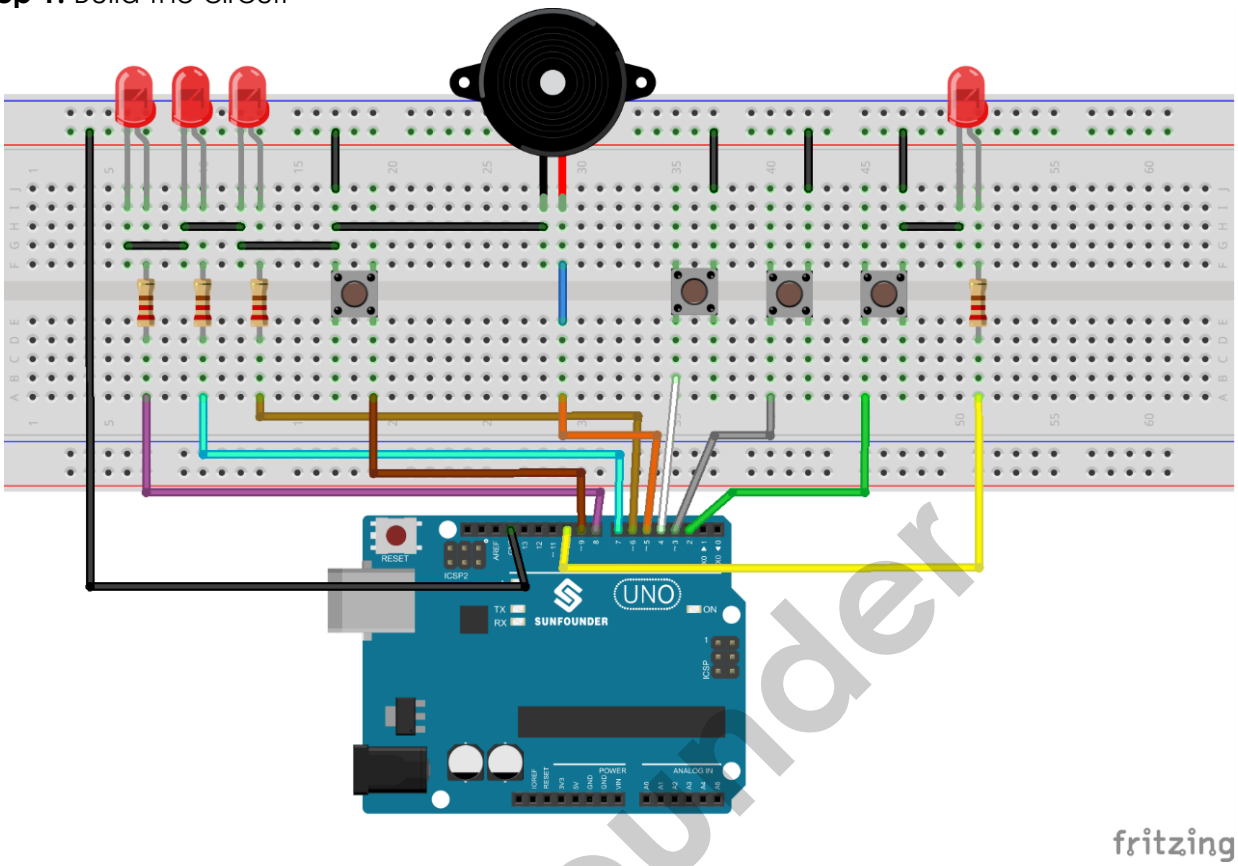


The schematic diagram

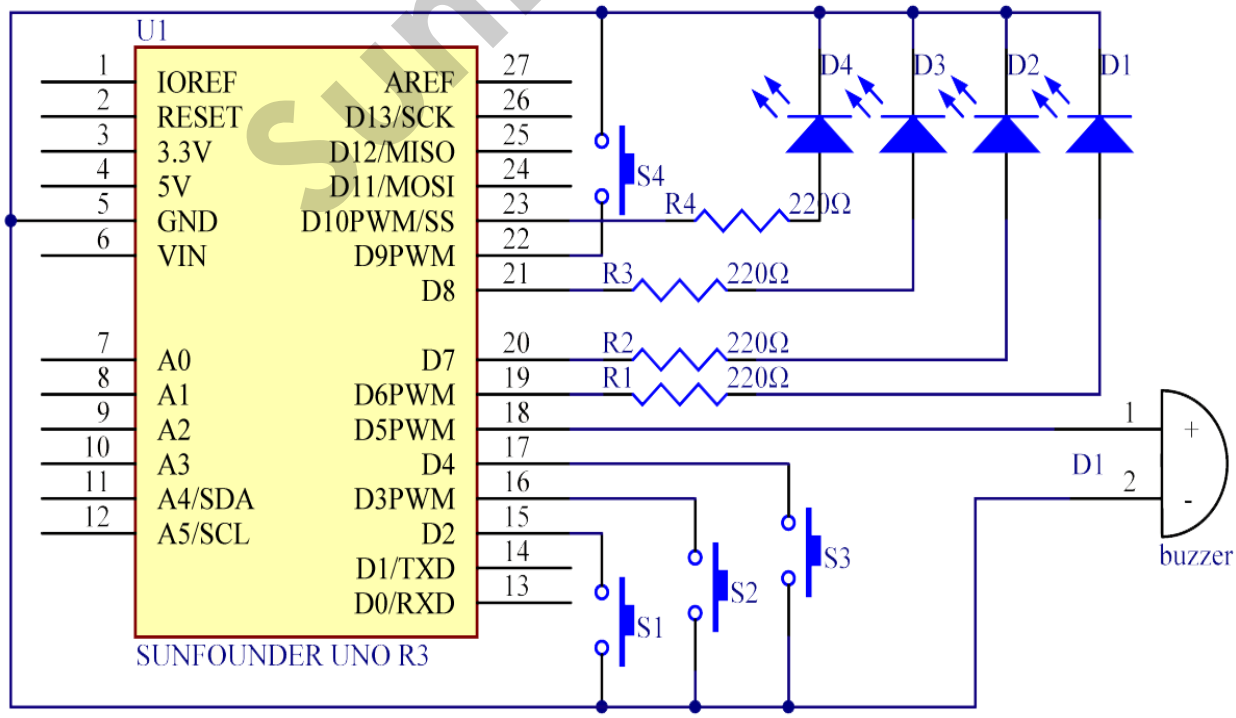


SunFounder

**Step 2:** Program (Please refer to the example code in LEARN -> Get Tutorials on our website)
**Step 3:** Compile the code
**Step 4:** Upload the sketch to the SunFounder Uno board

Now, first press button 4 to start. If you press button 1 first, you will see the corresponding LED light up and the buzzer will beep. Then press button 4 again to reset before you press other buttons.

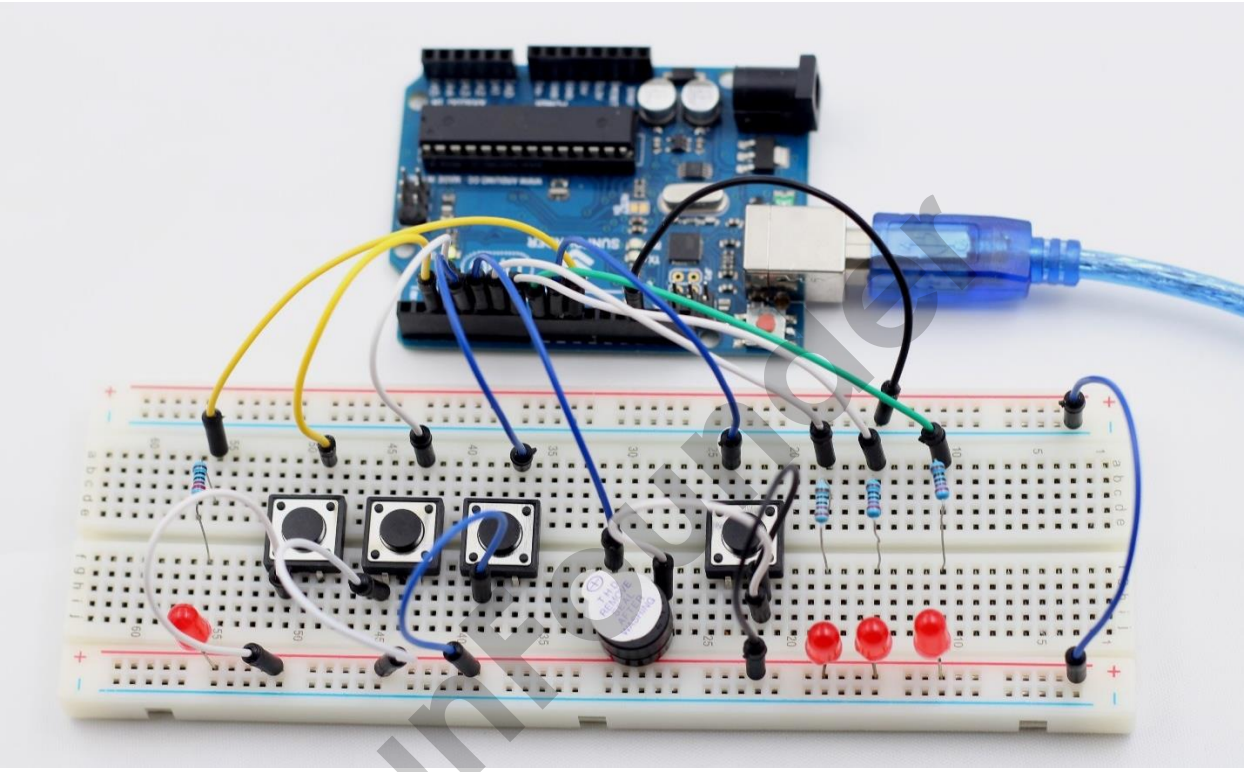

SunFounder

# Lesson 8 Serial Monitor

## Introduction

In this experiment, you will learn how to turn on or off LEDs through a computer and the Serial Monitor. Serial Monitor is used for communication between the Uno board and a computer or other devices. It is a built-in software in the Arduino environment and you can click the button on the upper right corner to open it. You can send and receive data via the serial port on the Uno board and control the board by input from the keyboard.

In this experiment, since we use colored LEDs as loads, you can enter a color among red, green, and blue on Serial Monitor in the IDE. The corresponding LED on the SunFounder Uno board will then light up.

## Components

- 1 * SunFounder Uno board
- 1 * Breadboard
- 3 * LED
- 3 * Resistor (220Ω)
- Jumper wires
- 1 * USB cable

## Principle

Here, the Serial Monitor serves as a transfer station for communication between your computer and the SunFounder Uno board. First, the computer transfers data to the Serial Monitor, and then the data is read by the SunFounder Uno board. Finally, the Uno will perform related operations.

SunFounder

## Experimental Procedures

**Step 1**: Build the circuit

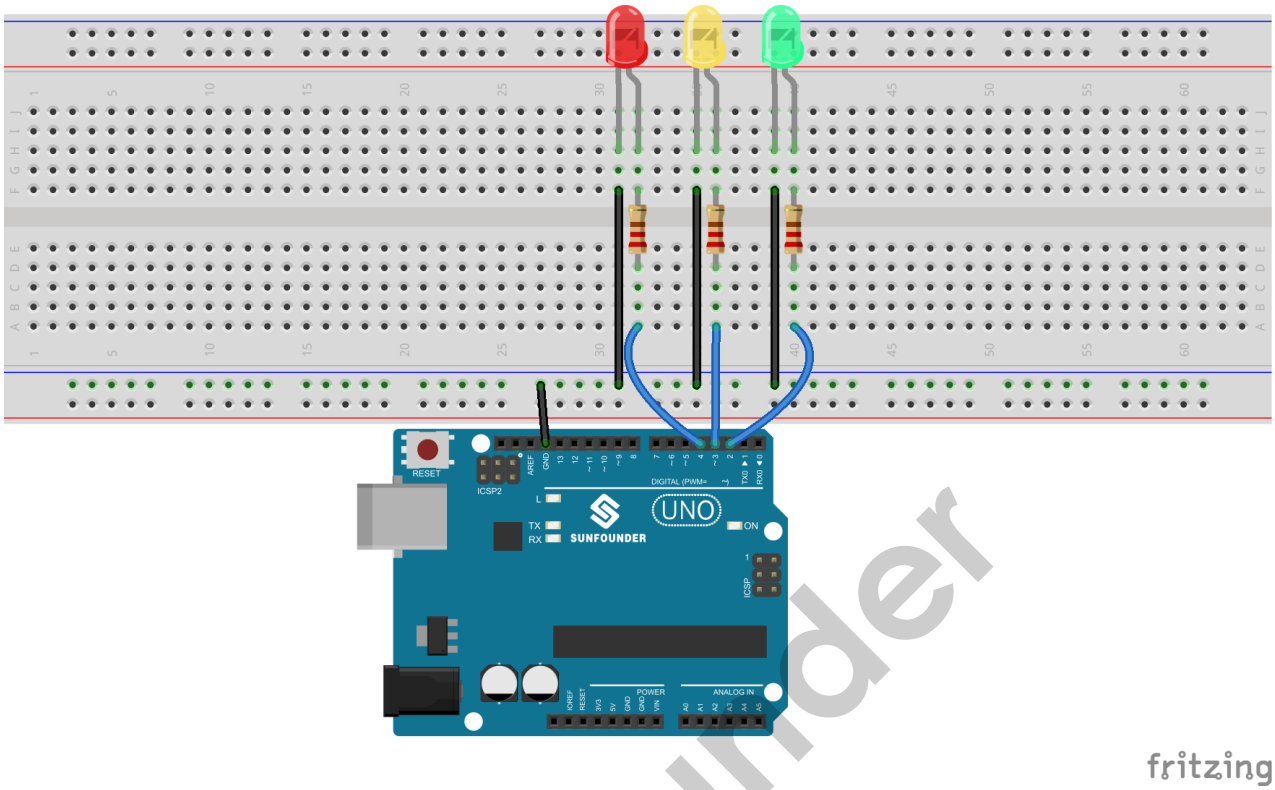


The schematic diagram

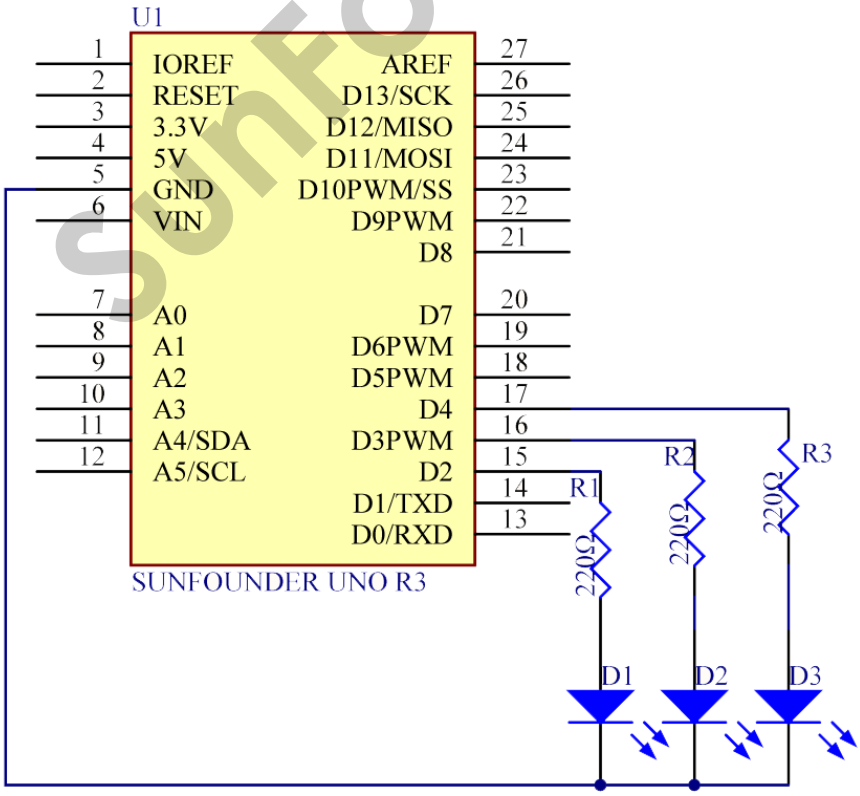


SunFounder

**Step 2:** Program (Please refer to the example code in LEARN -> Get Tutorials on our website)
**Step 3:** Compile the code
**Step 4:** Upload the sketch to the SunFounder Uno board

Now, click the Serial Monitor button at the upper right corner in the IDE. Then the Serial Monitor window will pop up as shown below.

With this window, you can not only send data from your computer to the SunFounder Uno board, but also receive data from the board and display it on the screen. When you open the window, it will display **"Please input any color of LED:**". You can input a color here. If you enter red, green, or blue, click **Send**, then the corresponding LED on the breadboard will light up. However, if you enter any color other than these three, no LEDs will be on.

For example, if you input red, you will see the red LED light up.

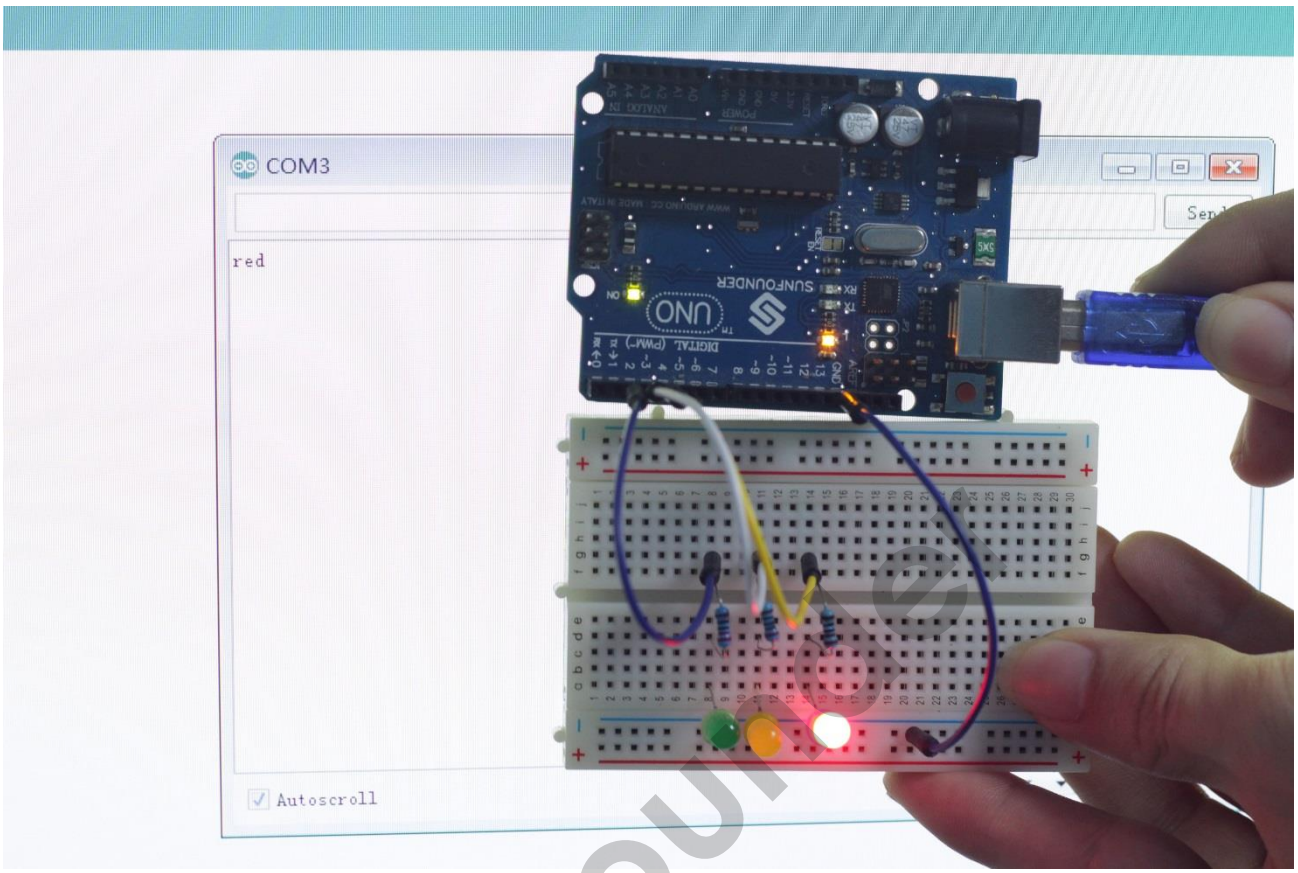


SunFounder

# Lesson 9 Photoresistor

## Introduction

A photoresistor or photocell is a light-controlled variable resistor. The resistance of a photoresistor decreases with increasing incident light intensity; in other words, it exhibits photoconductivity. A photoresistor can be applied in light-sensitive detector circuits, and light- and darkness-activated switching circuits.

## Components

- 1 * SunFounder Uno board
- 1 * USB data cable
- 1 * Photoresistor
- 1 * Resistor (10KΩ)
- 8 * LED
- 8 * Resistor (220Ω)
- Jumper wires
-1 * Breadboard

## Experimental Principle

The resistance of a photoresistor changes with incident light intensity. If the light intensity gets higher, the resistance decreases; if it gets lower, the resistance increases.

In this experiment, we will use eight LEDs to show the light intensity. The higher the light intensity is, the more LEDs will light up. When the light intensity is high enough, all the LEDs will be on. When there is no light, all the LEDs will go out.

SunFounder

## Experimental Procedures

**Step 1:** Build the circuit

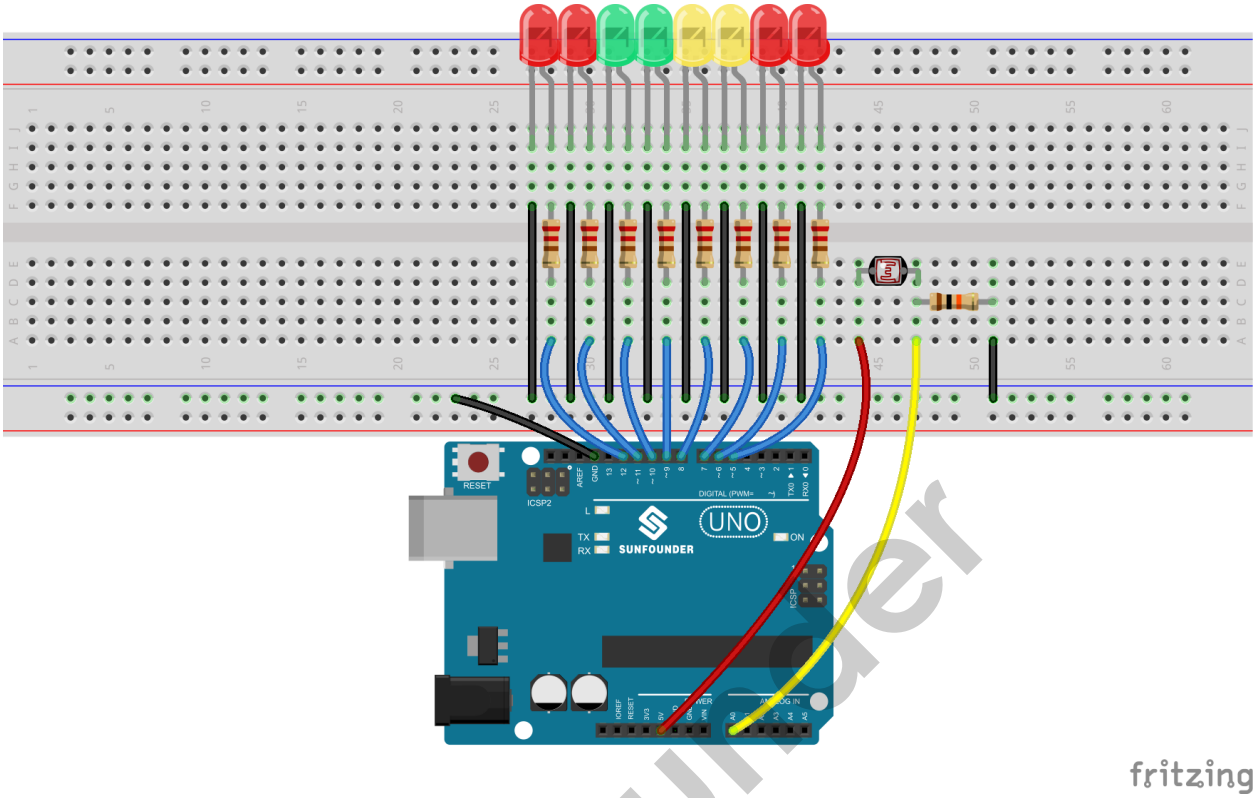


The schematic diagram

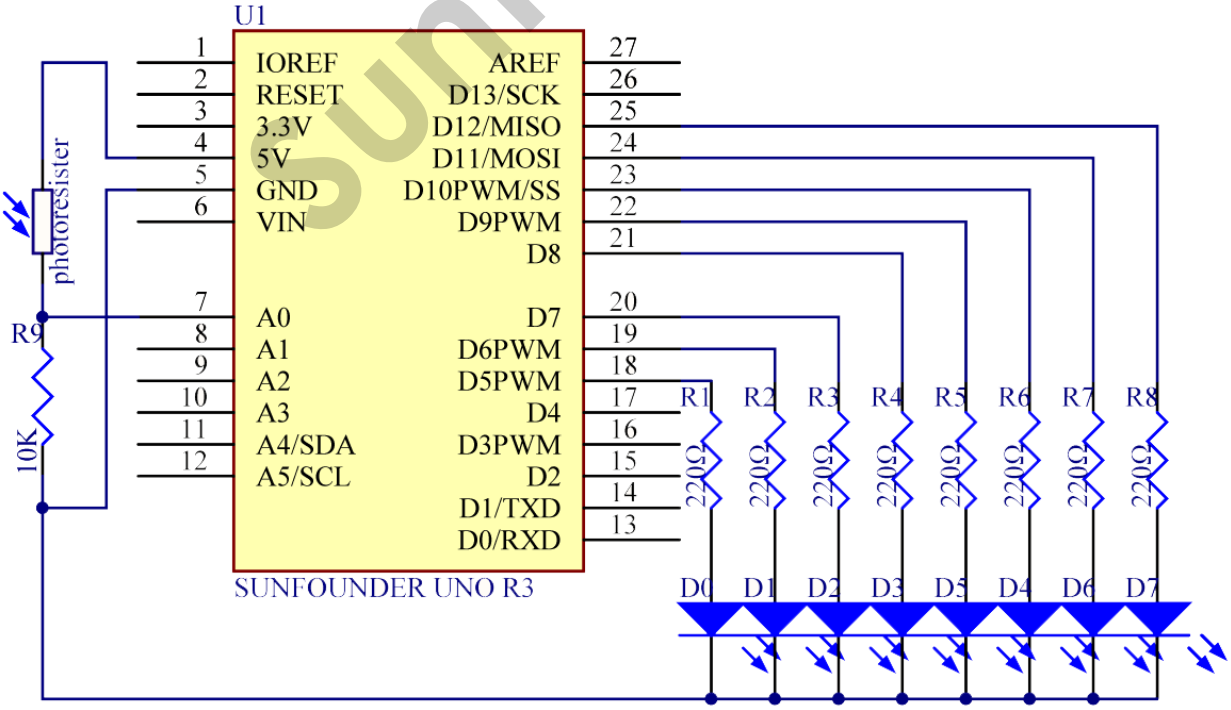


SunFounder

**Step 2:** Program (Please refer to the example code in LEARN -> Get Tutorials on our website)
**Step 3:** Compile the code
**Step 4:** Upload the sketch to the SunFounder Uno board

Now, shine some light on the photoresistor, and you will see several LEDs light up. Shine more light and you will see more LEDs light up. When you place it in a dark environment, all the LEDs will go out.

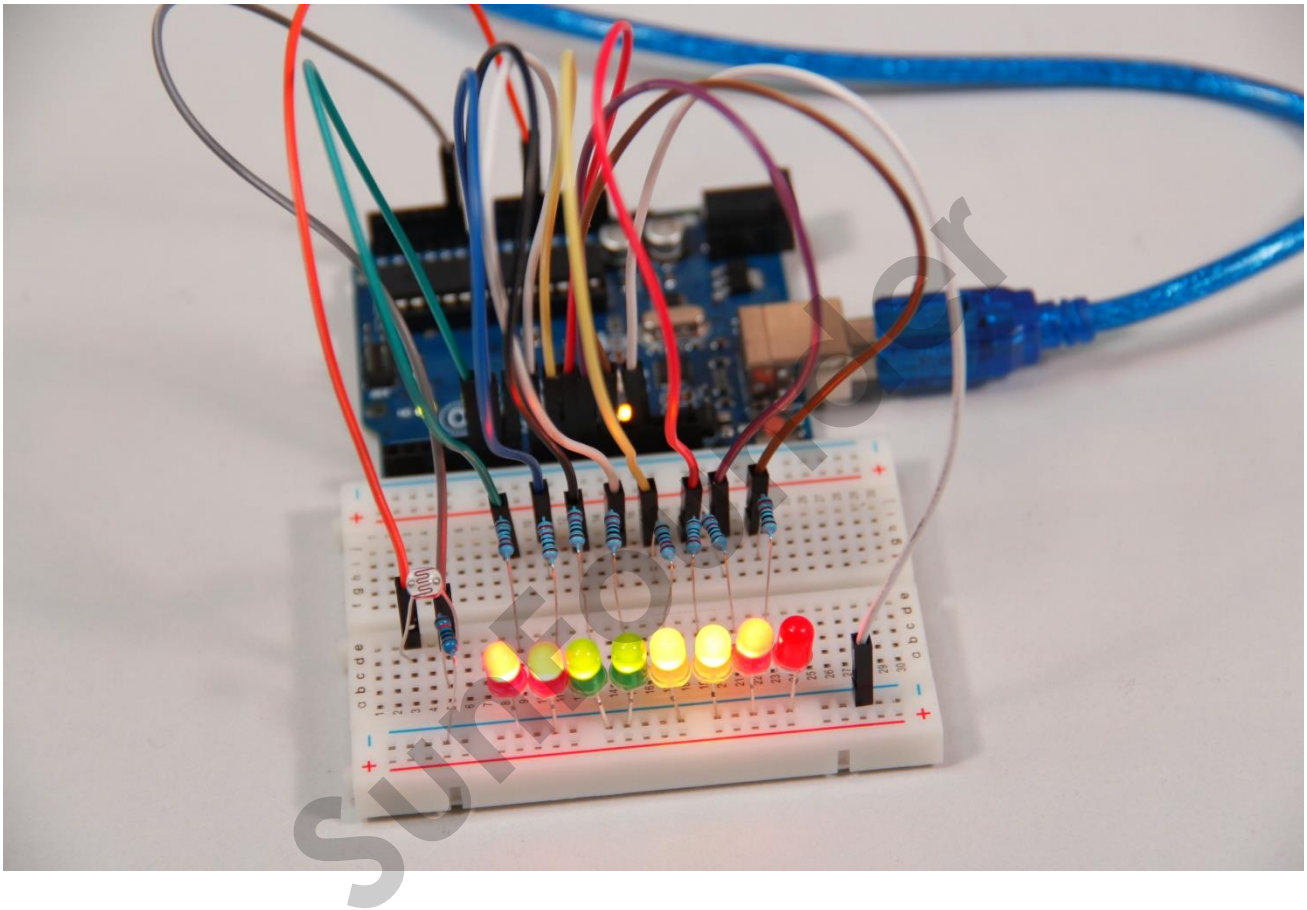


**Exploration**

In addition to the above experiment, you can replace the photoresistor with a microphone to use LEDs to indicate sound intensity. The higher the sound intensity is, the more LEDs are lit. You can realize this effect by yourself. Try now!

# Lesson 10 Controlling Buzzer by Photoresistor

## Introduction

Since you have learnt how to use a photoresistor, in this lesson, you will learn how to control a buzzer to make it beep in different frequencies by the photoresistor.

## Compoment

- 1* SunFounder Uno board
- 1 * USB data cable
- 1 * Photoresistor
- 1 * Buzzer (Active)
- 1 * Resistor (10KΩ)
- Several jumper wires
- 1 * Breadboard

## Experiment Principle

When you shine some light on the photoresistor, if the incident light gets stronger, the resistance of the photoresistor will decrease; if the incident light becomes weaker, the resistance will increase.

In this experiment, the output of the photoresistor is sent to pin A0 on the SunFounder Uno board and then processed by the ADC on the board to output a digital signal. We use this digital signal as the parameter of the *delay()* function in the sketch to make the buzzer beep.

When the incident light is strong, the output value gets greater, thus the buzzer will beep slowly; when incident light is weak, the output value is smaller, thus the buzzer will beep sharply.

SunFounder

## Experiment Procedures

**Step 1:** Build the circuit

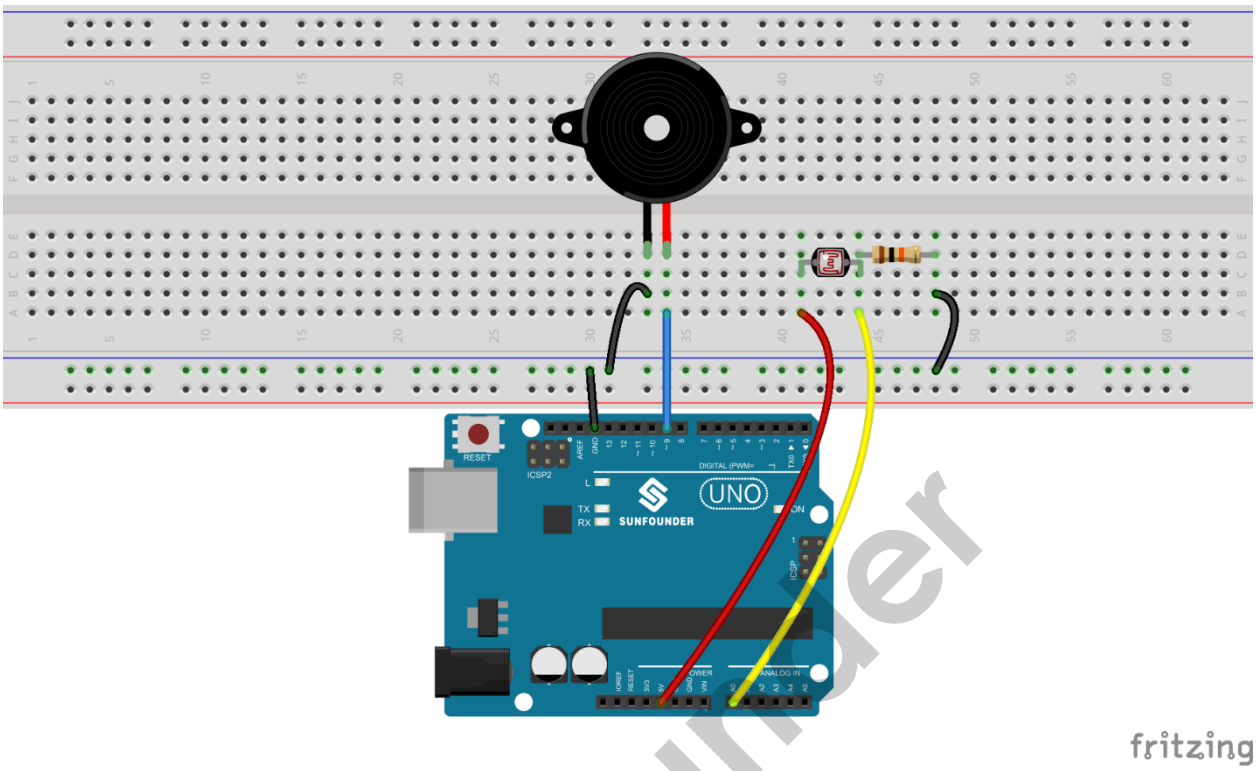


The schematic diagram

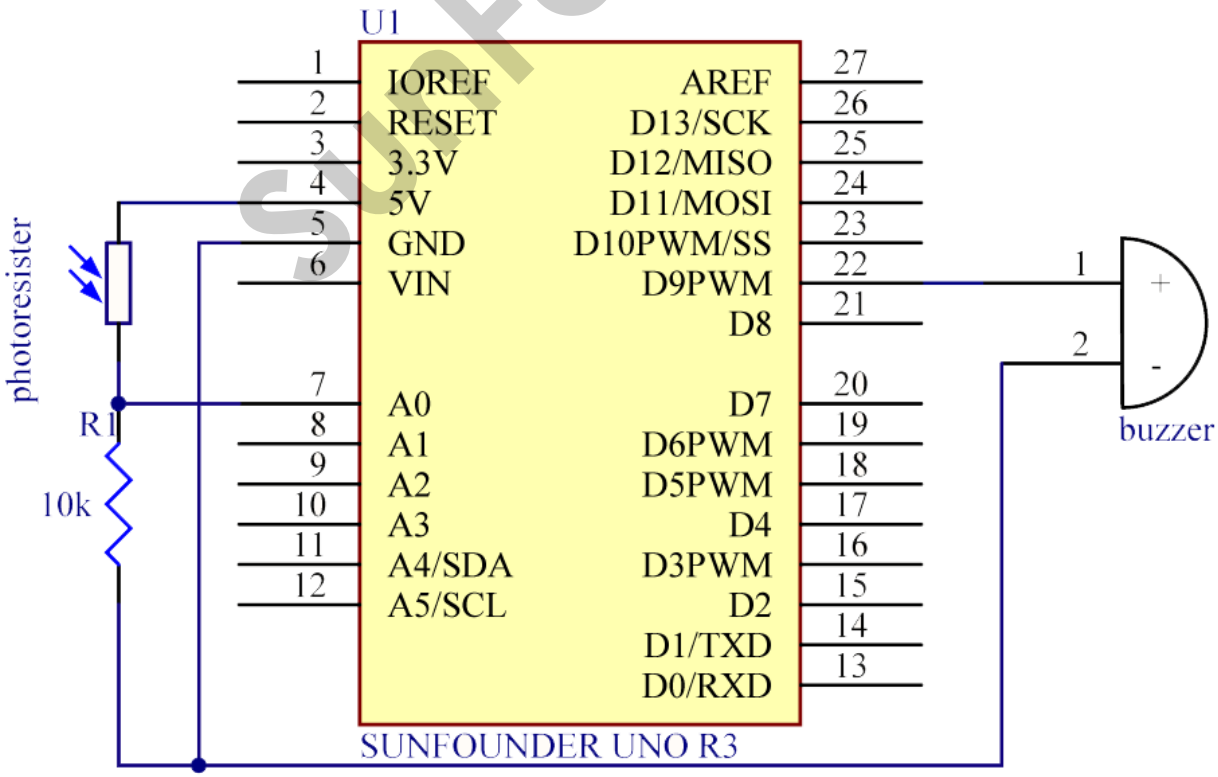


SunFounder

**Step 2:** Program (Please refer to the example code in LEARN -> Get Tutorials on our website)
**Step 3:** Compile the code
**Step 4:** Upload the sketch to the SunFounder Uno board

Now, if you place the photoresistor in a dark environment, the buzzer will beep sharply; if you shine a flashlight on the photoresistor, the buzzer beeping will slow down.

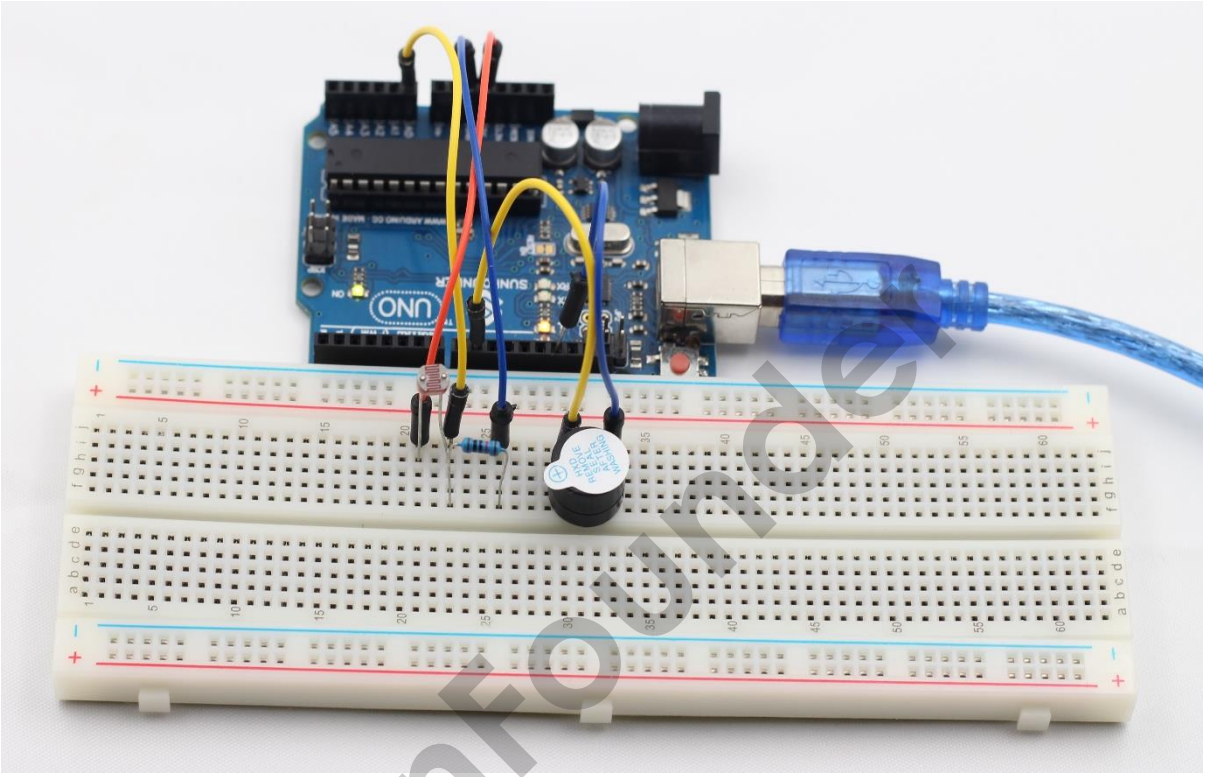

SunFounder

# Lesson 11 Voltmeter

## Introduction

In this lesson, we will use a potentiometer and an I2C LCD1602 to make a voltmeter.

## Components

- 1* SunFounder Uno board
- 1 * USB data cable
- 1 * Potentiometer (50KΩ)
- 1 * I2C LCD1602
- Several jumper wires
- 1 * Breadboard

## Experimental Principle

In this experiment, a potentiometer is used to divide voltage. Since the SunFounder Uno board can only read digital signals, but what the sliding end of the potentiometer outputs are analog signals, we need to convert these analog signals into digital ones with an Analog-to-Digital Convertor (ADC). Fortunately, the SunFounder Uno board itself comes with a 10-bit ADC which we can use to implement this conversion. Then display this digital output voltage on the I2C LCD1602.

## Experimental Procedures

**Step 1:** Build the circuit

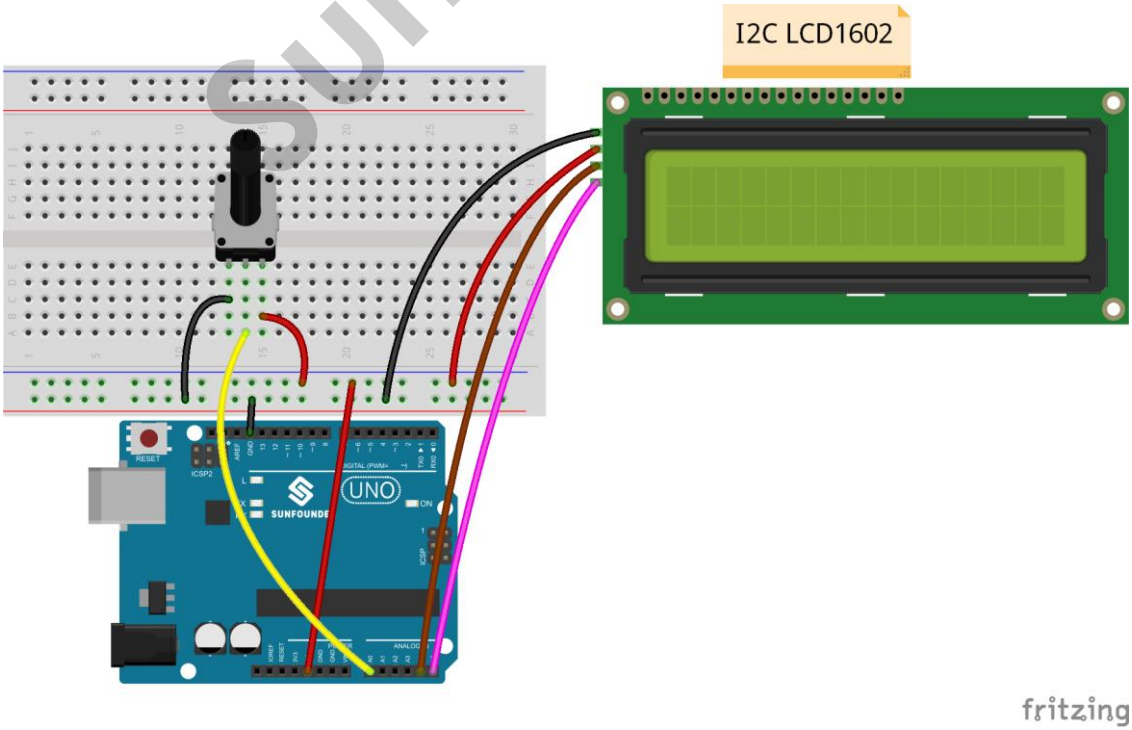


SunFounder

**Step 2:** Program (Please refer to the example code in LEARN -> Get Tutorials on our website)

***Note**: Here you need to add a library. Refer to the description in Lesson 4 previously in the manual.*

**Step 3:** Compile the code

**Step 4:** Upload the sketch to the SunFounder Uno board

Now, adjust the potentiometer and you will see the voltage displayed on the I2C LCD1602 varies accordingly.

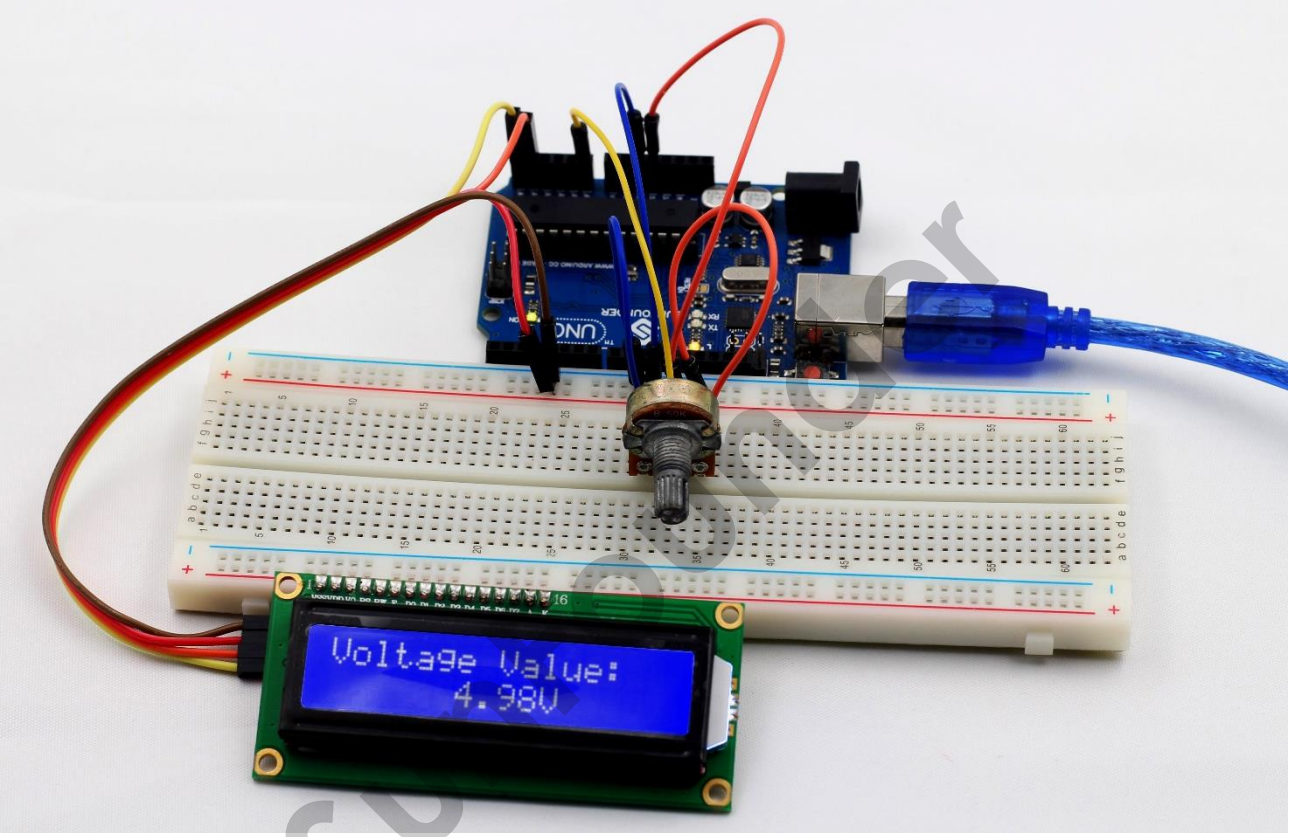

# Lesson 12 LM35 Temperature Sensor

## Introduction

LM35 is a temperature sensor produced by National Semiconductor. It has very high operational accuracy and a wide operating range. With small size, low cost and reliability, LM35 is widely applied in engineering. Since it uses internal compensation, the output can begin with 0℃. LM35 has many different packages. Under the normal temperature, the LM35 requires no additional calibration to reach the accuracy of plus or minus 1/4℃. The power supply mode can be classified as single power source and positive-and-negative double power supply. Its pins are as shown below. Under the positive-and-negative dual power supply mode, it can measure a negative temperature. Under the single power supply mode and 25℃, the quiescent current is about 50μA and it has a wide operation voltage range - between 4 to 20V, thus saving electricity.

SunFounder

## Components

- 1* SunFounder Uno board
- 1 * Breadboard
- 1 * USB data cable
- 1 * LM35 Temperature Sensor
- 1 * I2C LCD1602
- Several jumper wires

## Experimental Principle

The output voltage of the LM35 is proportional to Celsius temperature. When placed in 0℃ ambient temperature, it will output 0V. The output voltage will increase 10mV each time the temperature increases by 1℃. The calculation formula is as follows:

$$V_{\text{out_LM35}}(T) = 10\,\text{mV}/^{\circ}\text{C} \times T^{\circ}\text{C}$$

## Experimental Procedures

**Step 1:** Build the circuit

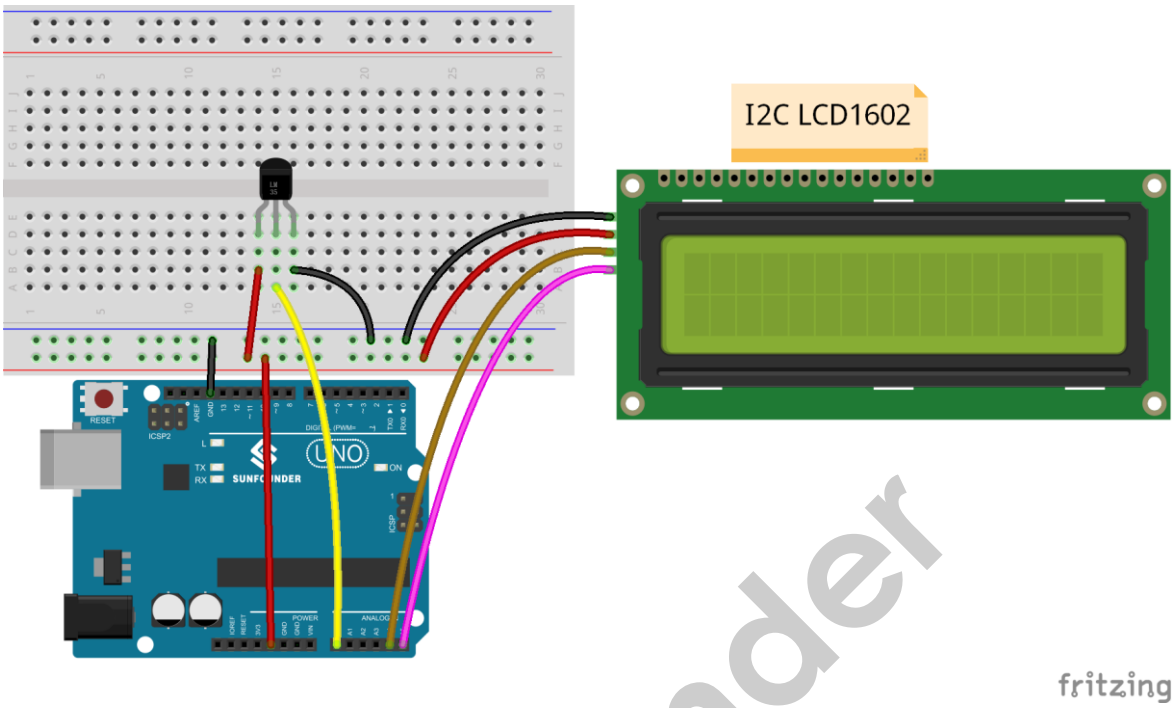


**Step 2:** Program (Please refer to the example code in LEARN -> Get Tutorials on our website)

***Note**: Here you need to add a library. Refer to the description in Lesson 4 previously in the manual.*

**Step 3:** Compile the code

**Step 4:** Upload the sketch to the SunFounder Uno board

Now, you can see the current temperature displayed on the I2C LCD1602.

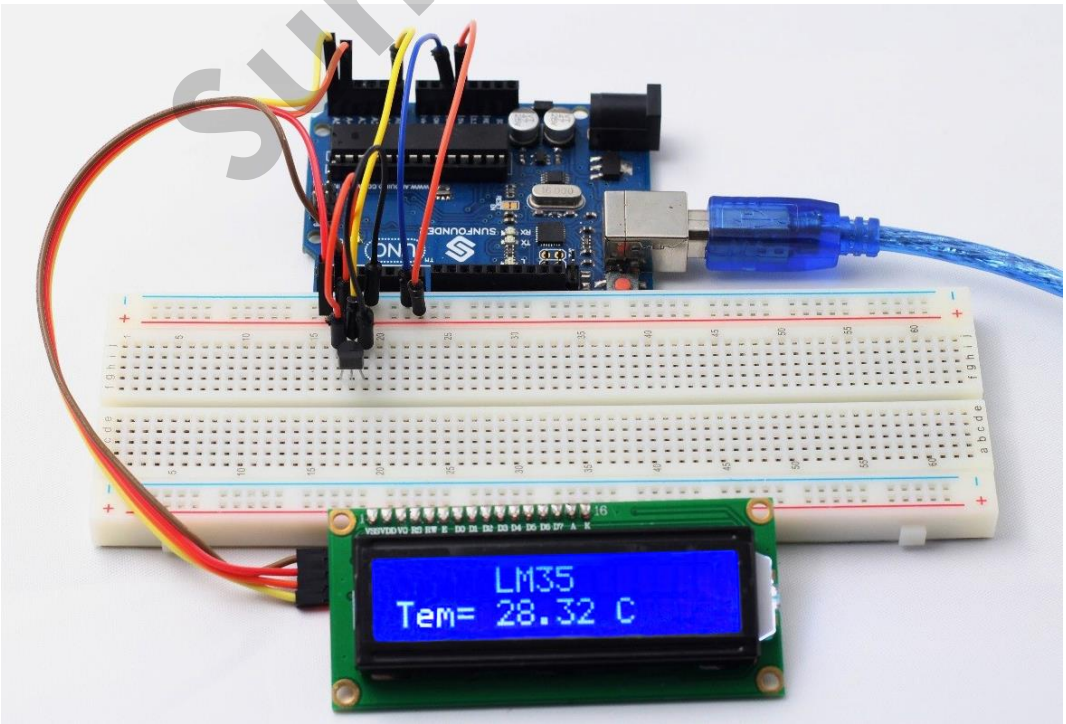


SunFounder

# Lesson 13 7-Segment Display

## Introduction

In this lesson, we will learn how to use a 7-segment display made up of an array of common cathode LEDs connected together in parallel. It is a simple and common component for displaying numbers or characters. The code used this time illuminates only one LED per unit time. The high refresh rate – higher than the resolution speed of the naked eye – enables us to see the numbers clearly. The 7-segment display also has the advantage of high and uniform luminance.

## Components

- 1 * SunFounder Uno board
- 1 * 7-segment display (Common Cathode)
- 8 * Resistor (220Ω)
- 1 * USB cable
- Jumper wires
- 1 * Breadboard

## Experimental Principle

The 7-segment display consists of seven LEDs arranged in a rectangular fashion. Each of the seven LEDs is called a segment because when illuminated the segment forms part of a numerical digit (both Decimal and Hex) to be displayed. An additional 8th LED is sometimes used within the same package thus allowing the indication of a decimal point (DP) when two or more 7-segment displays are connected together to display numbers greater than ten.

SunFounder

Each of the seven LEDs in the display is given a positional segment with one of its connection pins being brought straight out of the rectangular plastic package. These LED pins are

labeled from **a** through to **g** representing each individual LED. The other LED pins are connected together and wired to form a common pin.

So by forward biasing the appropriate pins of the LED segments in a particular order, some segments will be lit and others will be dark allowing the desired character pattern of the number to be generated on the display. This then allows us to display each of the ten decimal digits 0 through to 9 on the same 7-segment display.

The display's common pin is generally used to identify the type of 7-segment display. As each LED has two connecting pins, the "Anode" and "Cathode", there are therefore two types of LED 7-segment display: Common Cathode (CC) and Common Anode (CA).

The difference between the two displays, as their names suggest, is that the common cathode has all the cathodes of the 7-segments connected directly together and the common anode has all the anodes of the 7-segments connected together.

The Common Cathode – In the common cathode display, all the cathode connections of the LED segments are joined together to logic "0" or ground. The individual segments are illuminated by application of a "HIGH", or logic "1" signal via a current limiting resistor to forward bias the individual Anode terminals (a-g).

**Common Cathode 7-Segment Display**

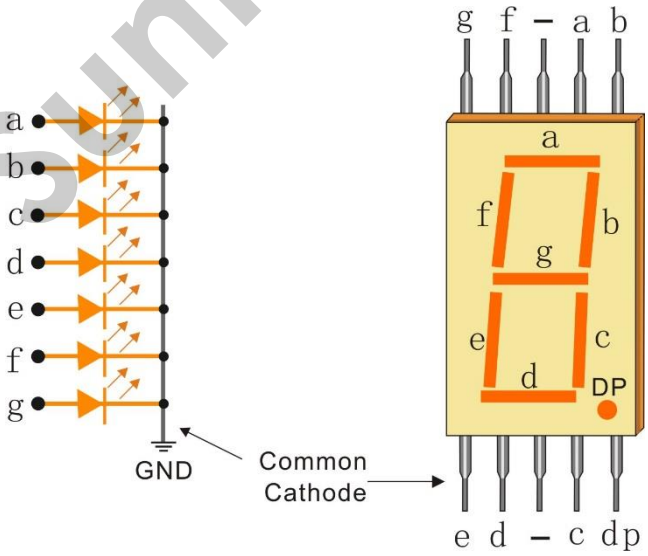


The Common Anode – In the common anode display, all the anode connections of the LED segments are joined together to logic "1". The individual segments are illuminated by applying a ground, logic "0" or "LOW" signal via a suitable current limiting resistor to the Cathode of the particular segment (a-g).

SunFounder

**Common Anode 7-Segment Display**

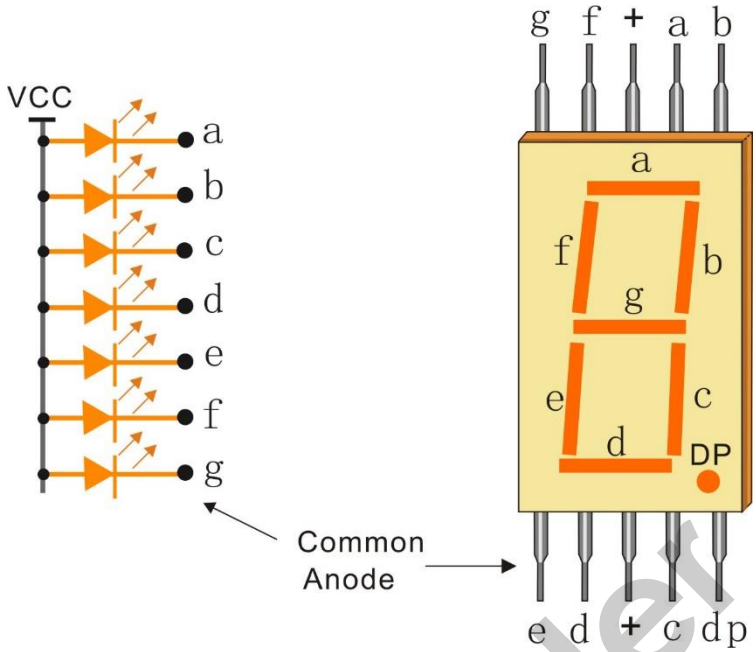


## Experimental Procedures

**Step 1:** Build the circuit

The wiring between the 7-segment display and the SunFounder Uno board is as shown below:

| 7-Segment Display | SunFounder Uno |
|---|---|
| a | 7 |
| b | 6 |
| c | 5 |
| d | 11 |
| e | 10 |
| f | 8 |
| g | 9 |
| dp | 4 |
| - | GND |

SunFounder

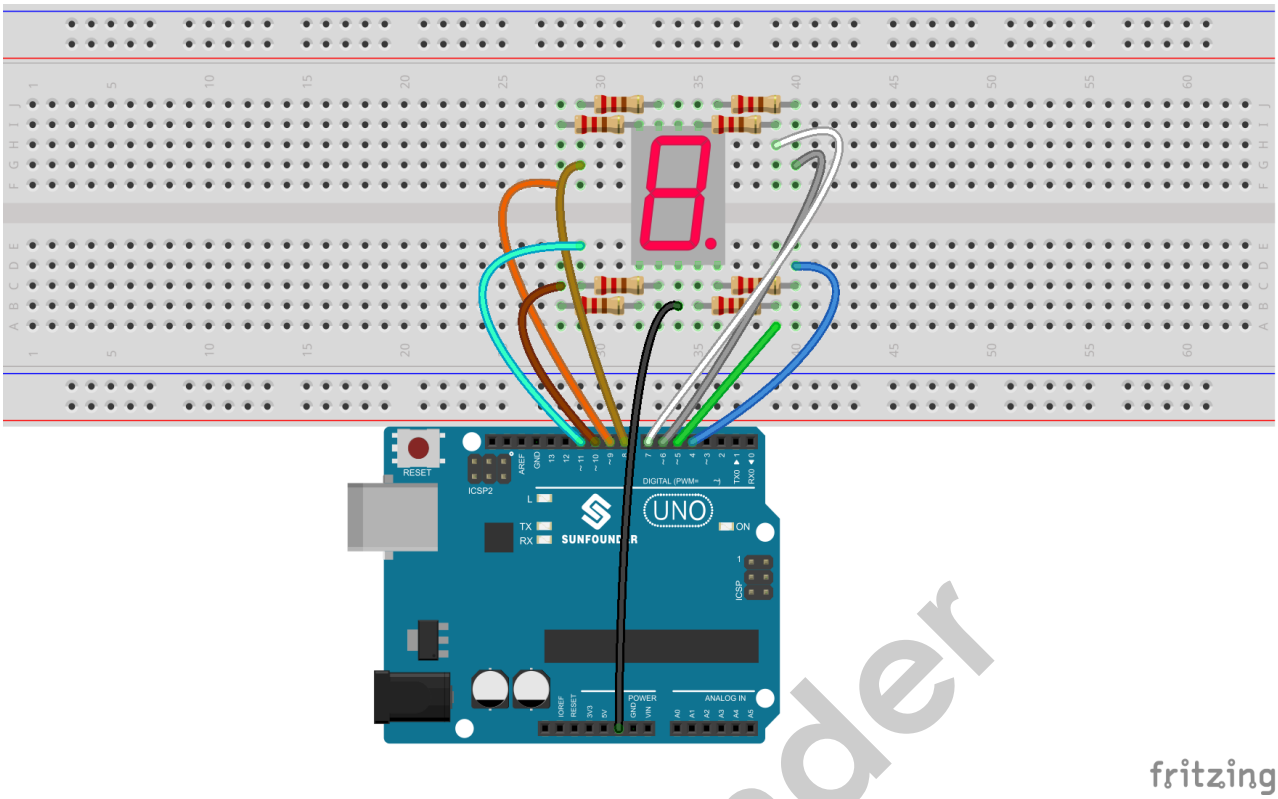


The schematic diagram

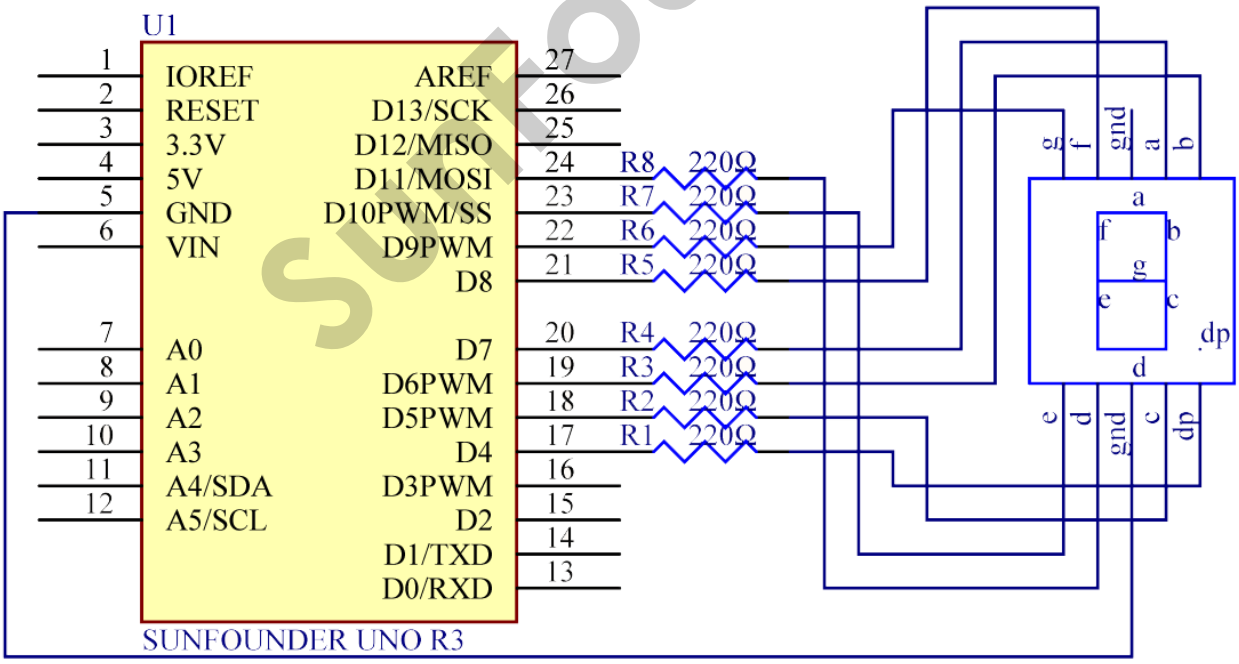


**Step 2:** Program (Please refer to the example code in LEARN -> Get Tutorials on our website)

**Step 3:** Compile the code

**Step 4:** Upload the sketch to the SunFounder Uno board

SunFounder

You should now see the 7-segment display showing characters circularly from 0 to 9 and then A to F, back and forth.

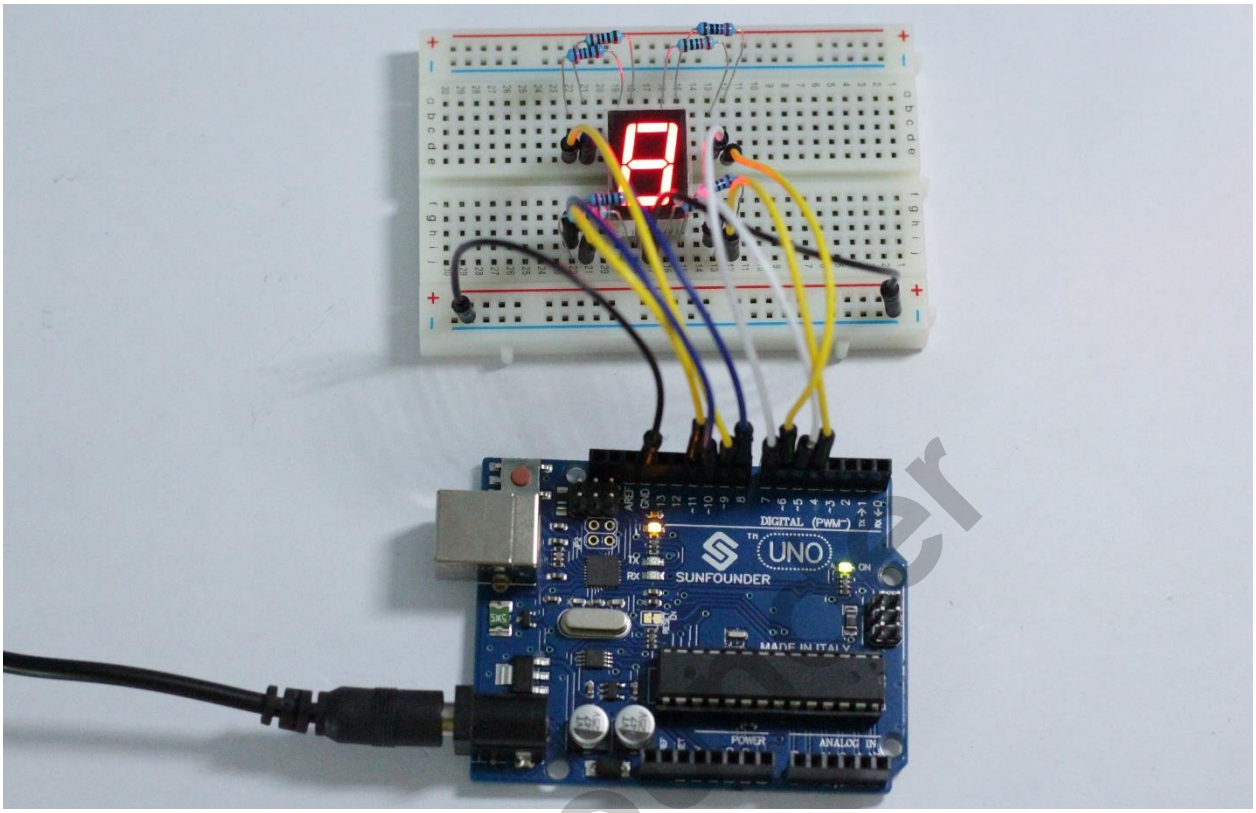


SunFounder

# Lesson 14 Stopwatch

## Introduction

In this lesson, we will use a 4-digit 7-segment display to make a stopwatch.

## Components

- 1 * SunFounder Uno board
- 1 * USB data cable
- 1 * 4-Digit 7-Segment Display
- Several jumper wires
- 1 * Breadboard
- 8 * Resister (220Ω)

## Experimental Principle

When a 7-segment display is used, if it is a common anode display, connect the anode pin to power source; if it is a common cathode one, connect the cathode pin to GND. When a 4-digit 7-segment display is used, the common anode or common cathode pin is to control the digit displayed. There is only one digit working. However, based on the principle of Persistence of Vision, we can see four 7-segment displays all displaying numbers. This is because the electronic scanning speed is too fast for us to notice interval.

The schematic diagram of the 4-digit 7-segment display is as shown below:

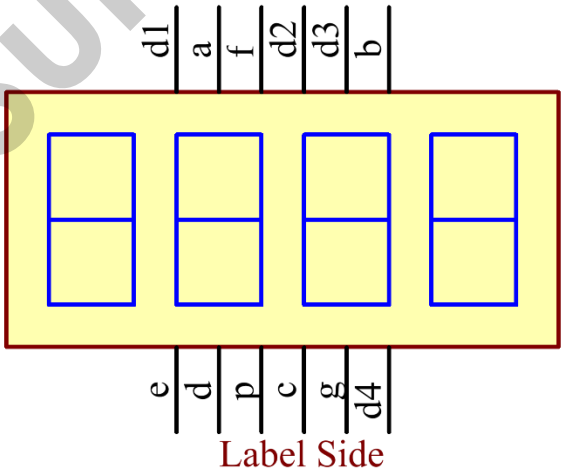


## Experimental Procedures

**Step 1:** Build the circuit

SunFounder

The wiring between the 4-digit 7-segment display and the SunFounder Uno board is as shown below:

| 4-Digit 7-Segment Display | SunFounder Uno |
|---|---|
| a | 2 |
| b | 3 |
| c | 4 |
| d | 5 |
| e | 6 |
| f | 7 |
| g | 8 |
| p | 9 |
| D1 | 13 |
| D2 | 12 |
| D3 | 11 |
| D4 | 10 |

SunFounder

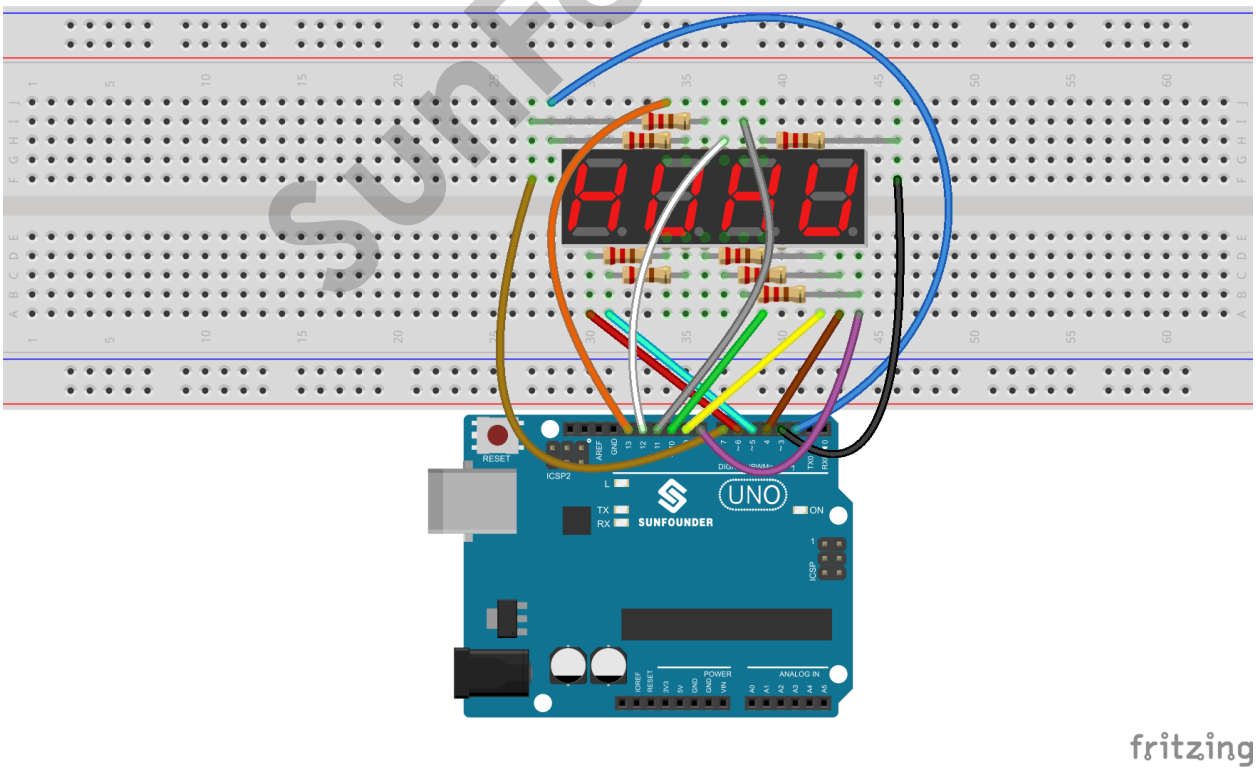

The schematic diagram

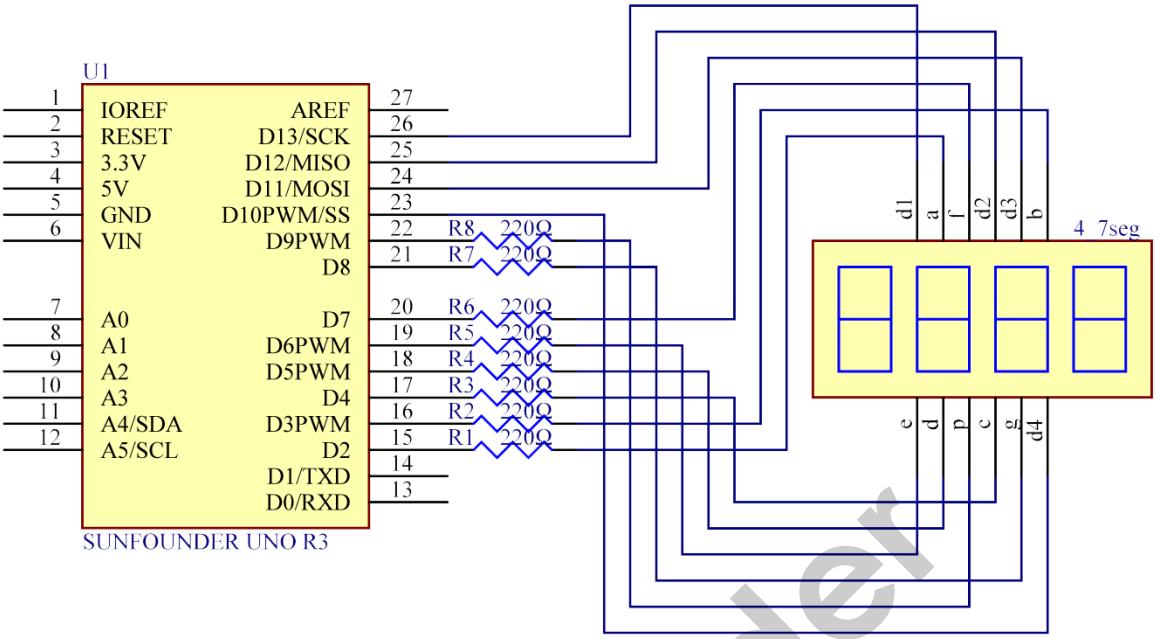


**Step 2:** Program (Please refer to the example code in LEARN -> Get Tutorials on our website)

***Note**: Here you need to add a library. Refer to the description in Lesson 4 previously in the manual.*

**Step 3:** Compile the code

**Step 4:** Upload the sketch to the SunFounder Uno board

Now, you can see the number increases by one per second on the 4-digit 7-segment display.

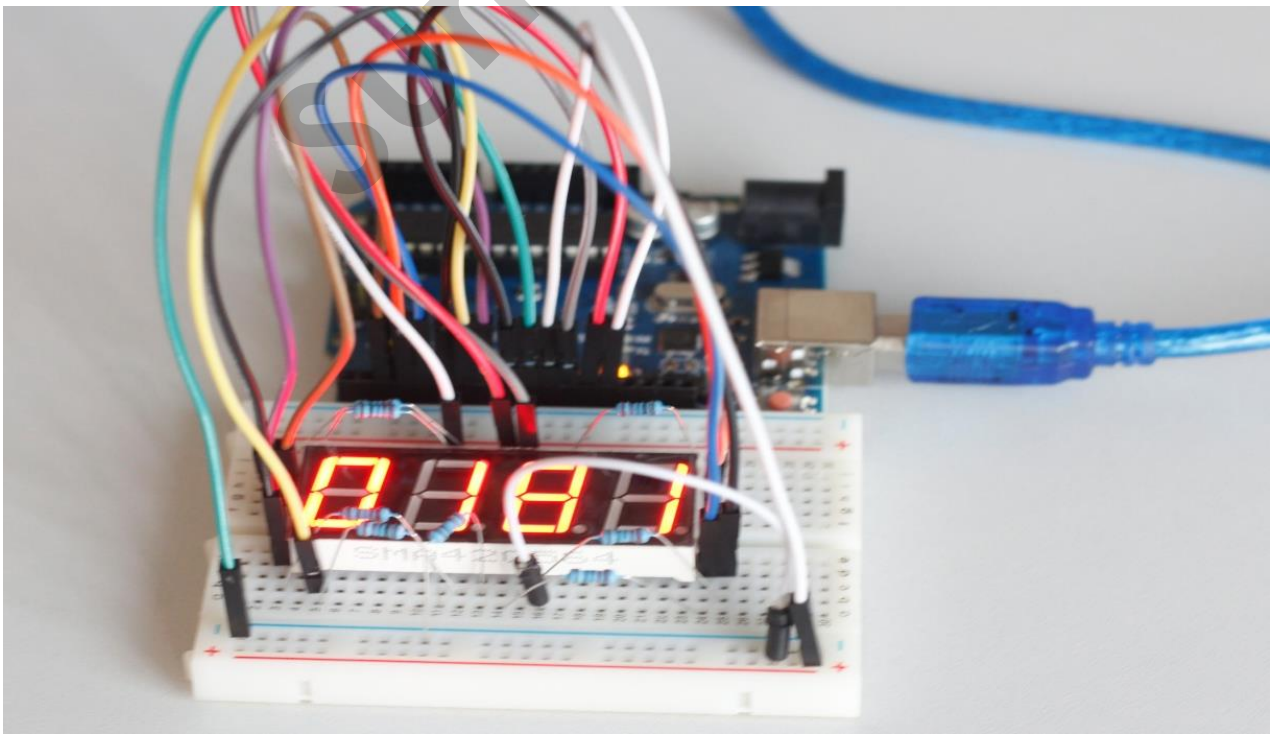

SunFounder

# Lesson 15 RGB LED

## Introduction

RGB LED modules can emit various colors of light. Three LEDs of red, green, and blue are packaged into a transparent or semitransparent plastic shell with four pins led out. The three primary colors of red, green, and blue can be mixed and compose all kinds of colors by brightness, so you can make an RGB LED emit colorful light by controlling the circuit.

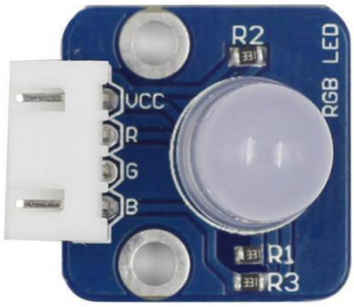


## Components

- 1 * SunFounder Uno board
- 1 * USB data cable
- 1 * RGB LED module
- 1 * 4-Pin anti-reverse cable

## Experimental Principle

In this experiment, we will use PWM technology to control the brightness of RGB. We've described the concept in Lesson 2 of this kit. You may check the information, if necessary.

Each of the three color channels: red, green, and blue, has 255 stages of brightness. When the three primary colors are all 0, the LED light is turned off. When the colors are all 255, the LED gets brightest. Here we input any value between 0 and 255 to the three pins of the RGB LED to make it display different colors.

RGB LEDs can be categorized into common anode LED and common cathode LED. In this experiment, we use a common cathode RGB LED. See the schematic diagram as below:

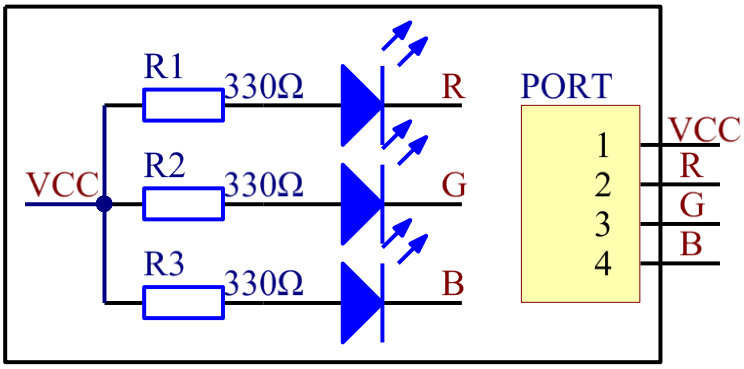


SunFounder

**Experimental Procedures**

**Step 1:** Build the circuit

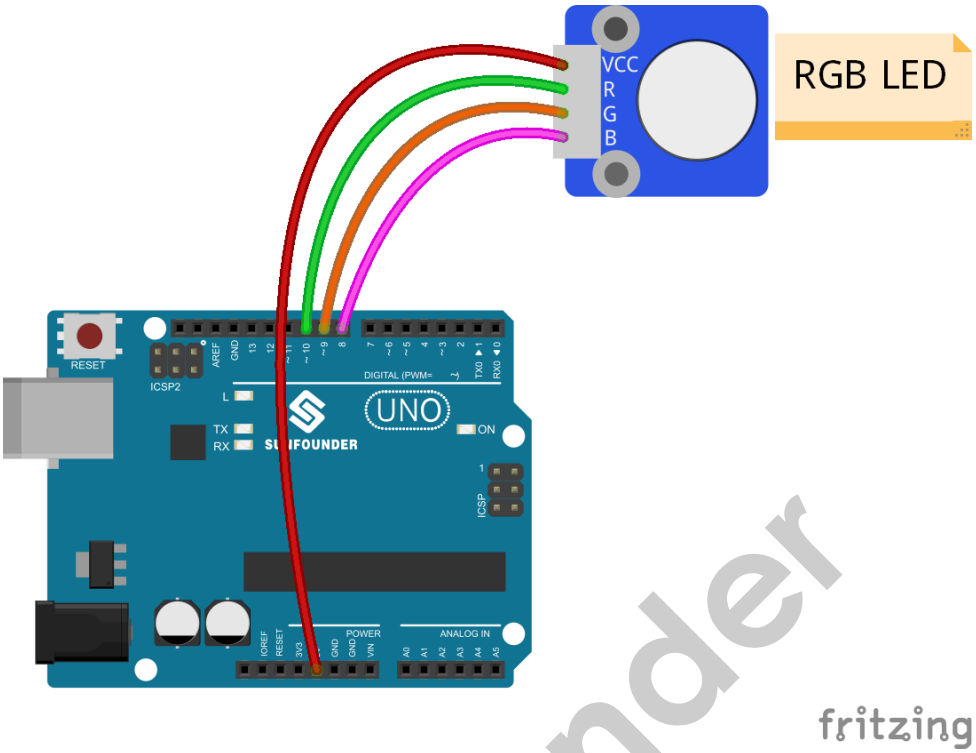


**Step 2:** Program (Please refer to the example code in LEARN -> Get Tutorials on our website)

**Step 3:** Compile the code

**Step 4:** Upload the sketch to the SunFounder Uno board

Now, you can see RGB LED flash red, green and blue first, and then change to red, orange, yellow, green, blue, indigo and purple.

SunFounder

# Lesson 16 74HC595

## Introduction

In this experiment, you will learn how to use 74HC595 to drive a 7-segment display.

Generally, there are two ways to drive a single 7-segment display. One is to connect its 8 pins directly to eight ports on the SunFounder Uno board, which we have done previously. The other is to connect 74HC595 to three ports of the SunFounder Uno board and connect the 7-segment display to 74HC595. In this experiment, we will use the latter. By this way, you can save five ports. Considering the SunFounder Uno board's limited ports, this is very important.

## Components

- 8 * Resistor (220Ω)
- 1 * 74HC595
- 1 * SunFounder Uno board
- Jumper wires
- 1 * Breadboard
- 1 * USB cable
- 1 * 7-segment display

## Principle

### 74HC595

The 74HC595 consists of an 8−bit shift register and a storage register with three−state parallel outputs. It converts serial input into parallel output so that you can save IO ports of an MCU. The 74HC595 is widely used to indicate multipath LEDs and drive multi-bit segment displays. "Three-state" refers to the fact that you can set the output pins as either high, low or "high impedance." With data latching, the instant output will not be affected during the shifting; with data output, you can cascade 74HC595s more easily.

SunFounder

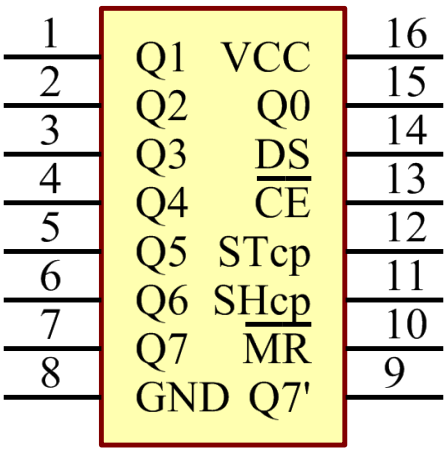

**Pins of 74HC595 and their functions**:

**Q0-Q7**: 8-bit parallel data output pins, able to control 8 LEDs or 8 pins of 7-segment display directly.

**Q7'**: Series output pin, connected to DS of another 74HC595 to connect multiple 74HC595s in series

**MR**: Reset pin, active at low level; here it is directly connected to 5V.

**SH**: Time sequence input of shift register. On the rising edge, the data in shift register moves successively one bit, i.e. data in Q1 moves to Q2, and so forth. While on the falling edge, the data in shift register remain unchanged.

**ST**: Time sequence input of storage register. On the rising edge, data in the shift register moves into memory register.

**OE** : Output enable pin, active at low level, connected to GND.

**Ds** : Serial data input pin

**VCC**: Positive supply voltage

**GND**: Ground

Here the *shiftout()* function is used, which comes with the Arduino IDE. Simply input a number between 0 and 255 and the storage register can convert it into an 8-bit binary number and output it in parallel. This allows you to easily control the 8 pins of the 7-segment display and create any patterns you want.

SunFounder

## Experimental Procedures

**Step 1:** Build the circuit

| 7-Segment Display | 74HC595 | SunFounder Uno R3 |
|---|---|---|
| a | Q7 | |
| b | Q6 | |
| c | Q5 | |
| d | Q4 | |
| e | Q3 | |
| f | Q2 | |
| g | Q1 | |
| DP | Q0 | |
| | VCC | 5V |

| | | |
|---|---|---|
| | DS | 11 |
| | CE | GND |
| | ST | 12 |
| | SH | 8 |
| | MR | 5V |
| | Q7' | N/C |
| | GND | GND |
| " _ " | | GND |

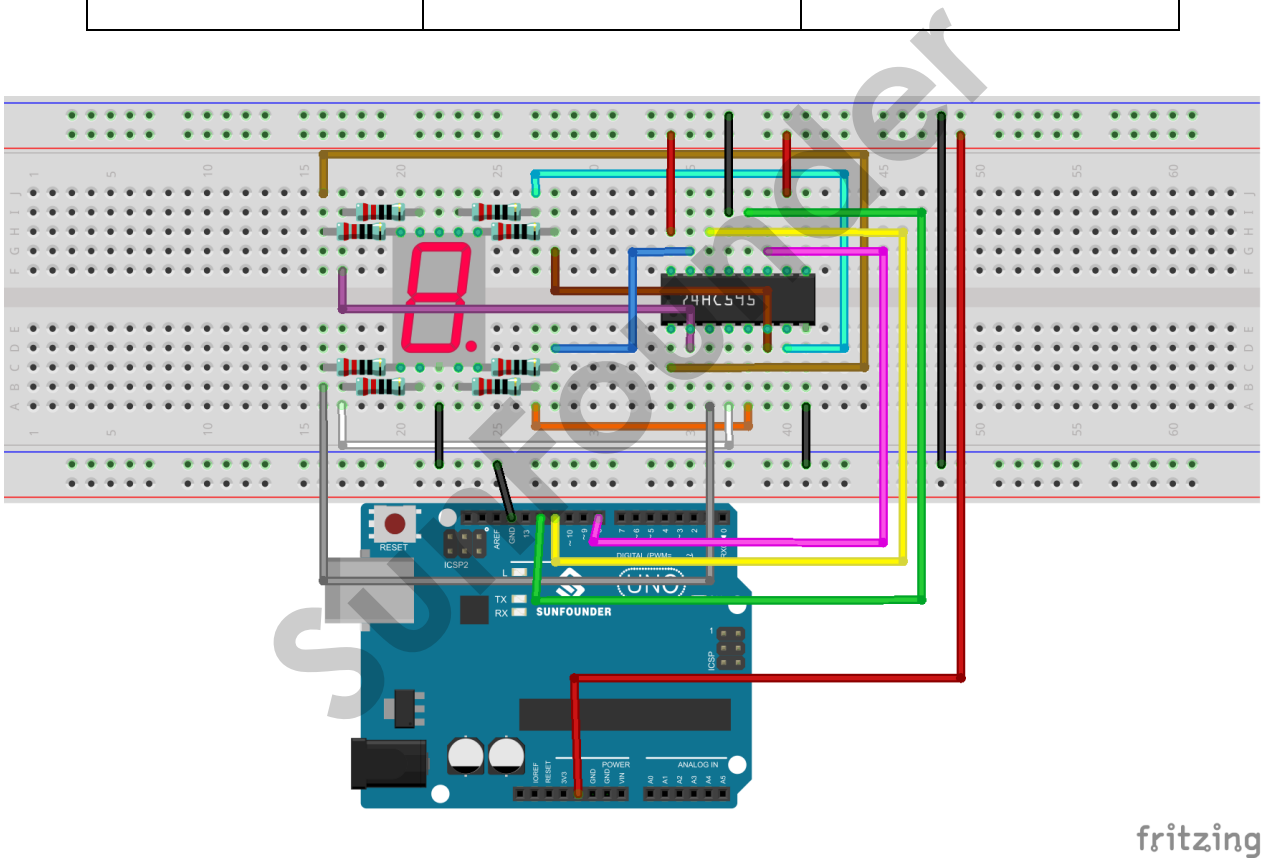

The schematic diagram

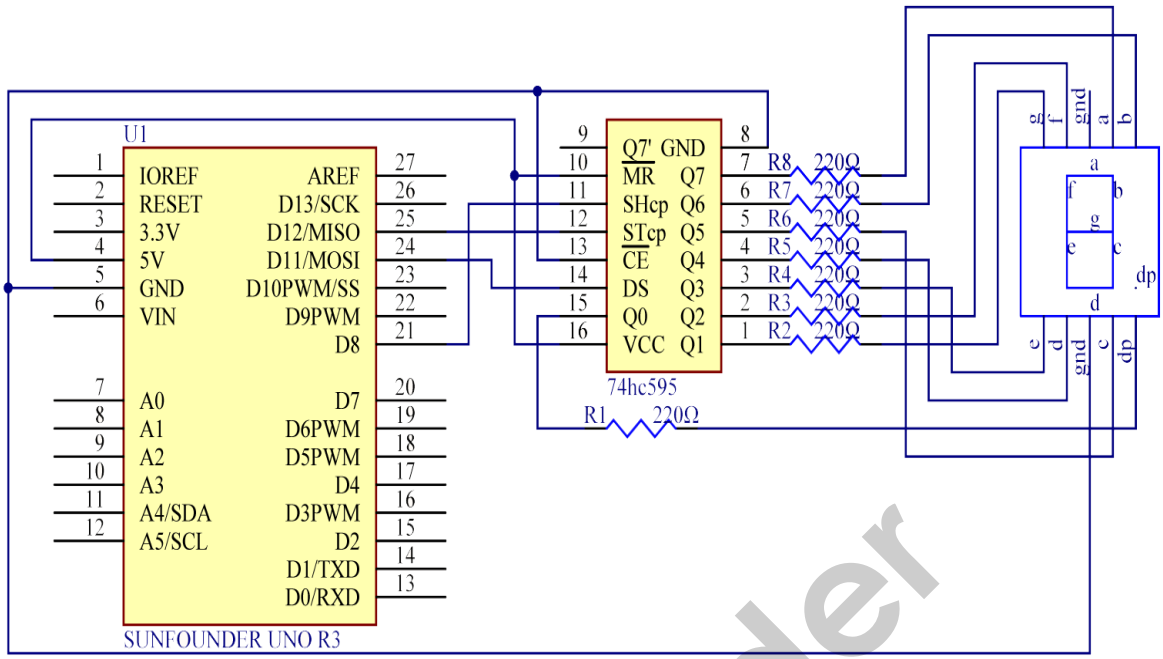


**Step 2:** Program (Please refer to the example code in LEARN -> Get Tutorials on our website)

**Step 3:** Compile the code

**Step 4:** Upload the sketch to the SunFounder Uno board

You should now see the 7-segment display cycle from 0 to F.

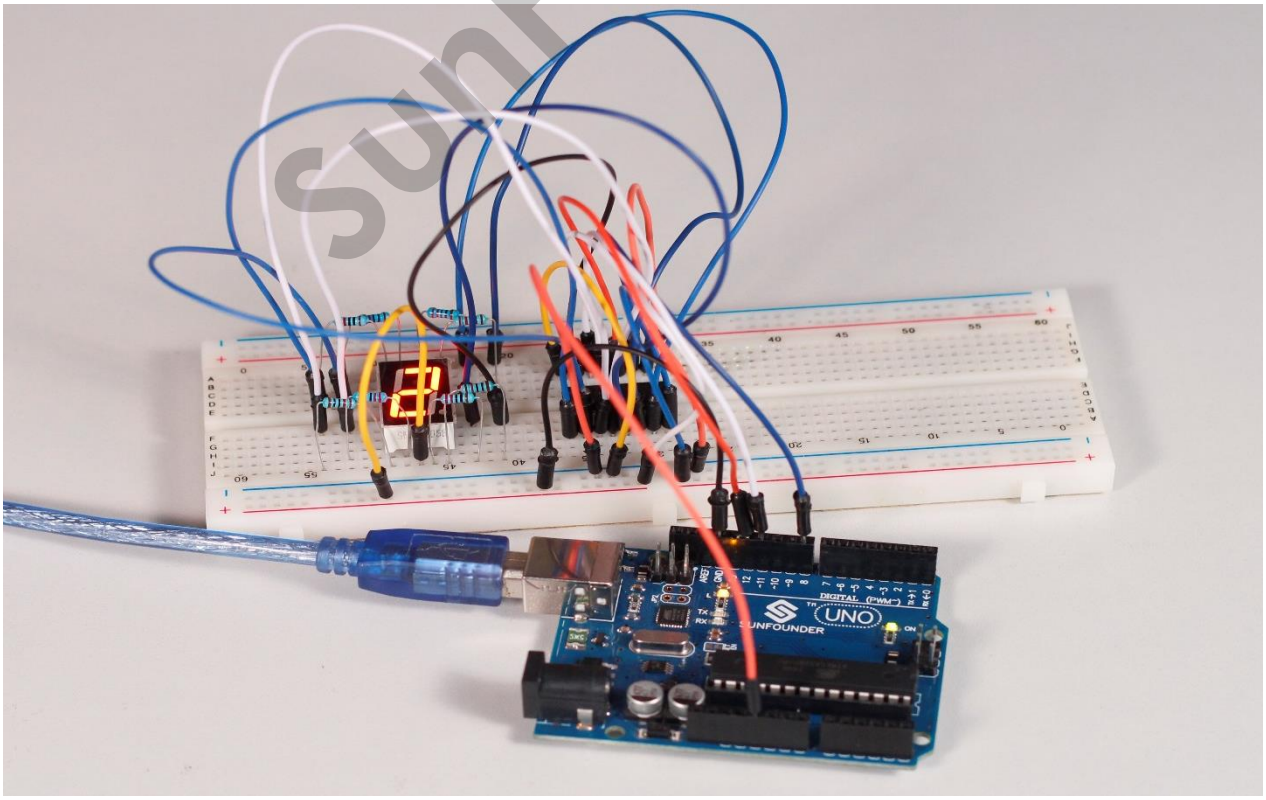

SunFounder

# Lesson 17 Relay Module

## Introduction

As we know relay is a device which is used to provide connection between two or more points or device in response to the input signal applied. In another words relay provide isolation between the controller and the device as we know devices may work on AC as well as on DC. However, they receive signals from microcontroller which works on DC hence we require a relay to bridge the gap. Relay is extremely useful when you need to control a large amount of current or voltage with small electrical signal.

## Components

- 1 * SunFounder Uno board
- 1 * USB data cable
- 1 * Relay module
- 1 * 3-Pin anti-reverse cable

## Experimental Principle

**Relay** – There are 5 parts in every relay:

1. **Electromagnet** – It consists of an iron core wounded by coil of wires. When electricity is passed through, it becomes magnetic. Therefore, it is called electromagnet.

2. **Armature** – The movable magnetic strip is known as armature. When current flows through them, the coil is it energized thus producing a magnetic field which is used to make or break the normally open (N/O) or normally close (N/C) points. And the armature can be moved with direct current (DC) as well as alternating current (AC).

3. **Spring** – When no currents flow through the coil on the electromagnet, the spring pulls the armature away so the circuit cannot be completed.

4. Set of electrical **contacts** – There are two contact points:

- Normally open - connected when the relay is activated, and disconnected when it is inactive.
- Normally close – not connected when the relay is activated, and connected when it is inactive.

5. Molded frame – Relays are covered with plastic for protection.

SunFounder

## Working of Relay

The working principle of relay is simple. When power is supplied to the relay, currents start flowing through the control coil; as a result, the electromagnet starts energizing. Then the armature is attracted to the coil, pulling down the moving contact together thus connecting with the normally open contacts. So the circuit with the load is energized. Then breaking the circuit would a similar case, as the moving contact will be pulled up to the normally closed contacts under the force of the spring. In this way, the switching on and off of the relay can control the state of a load circuit.

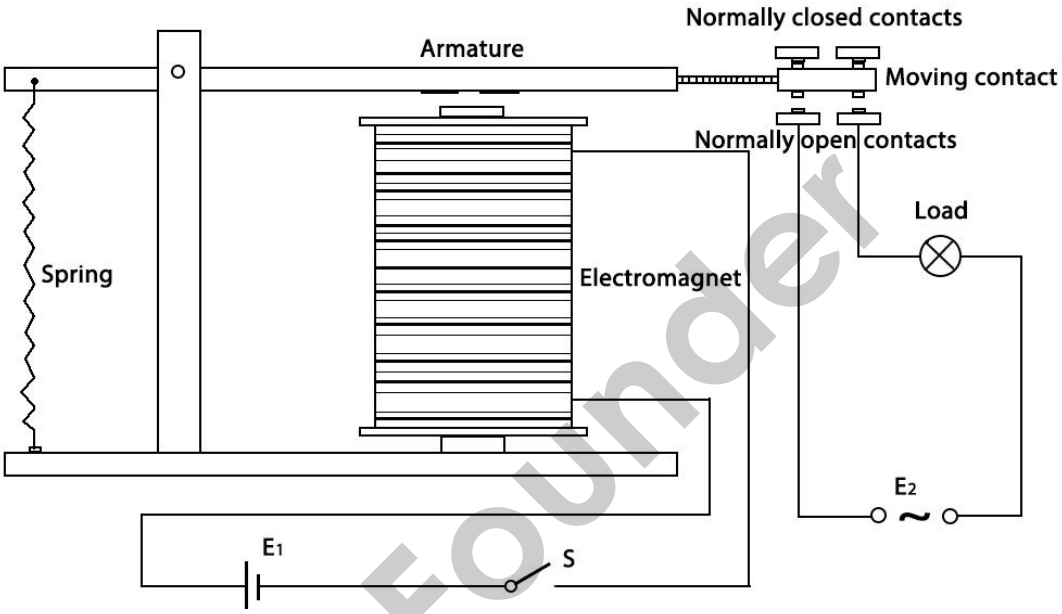


So in this experiment, hook the SIG to the SunFounder Uno board. Send a low level to SIG; the PNP transistor is energized and the coil of the relay is electrified. Thus, the normally open contact of the relay is closed, while the normally closed contact of the relay will be off the public port. Send a high level to SIG; the transistor will be de-energized and the relay will restore to the initial state.

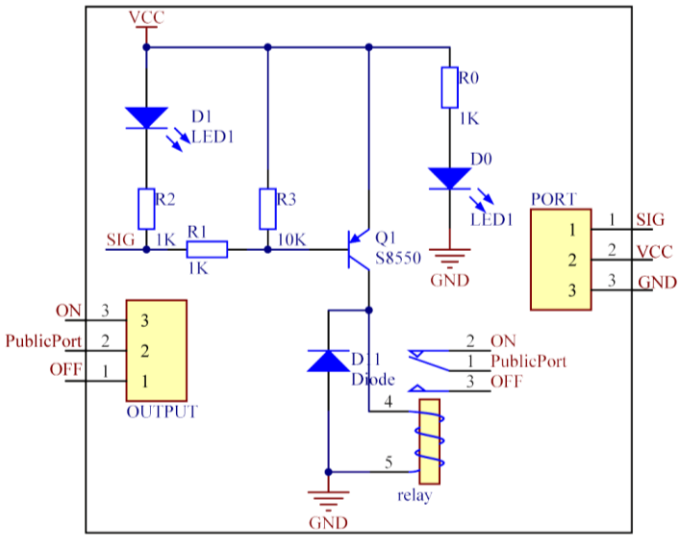


SunFounder

## Experimental Procedures

**Step 1:** Build the circuit

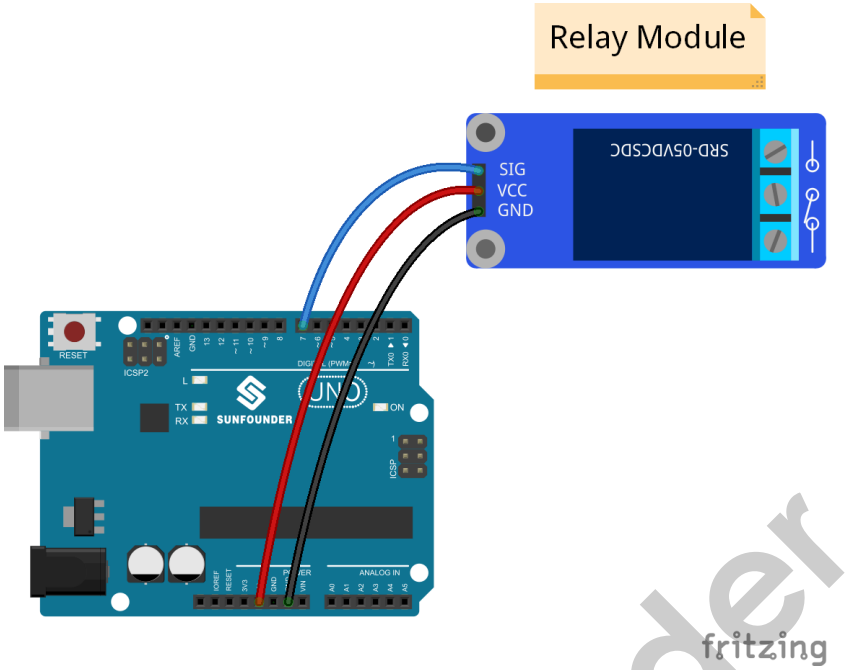


**Step 2:** Program (Please refer to the example code in LEARN -> Get Tutorials on our website)

**Step 3:** Compile the code

**Step 4:** Upload the sketch to the SunFounder Uno board

Now, you may hear ticktock. That's the normally closed contact opened and the normally open contact closed.

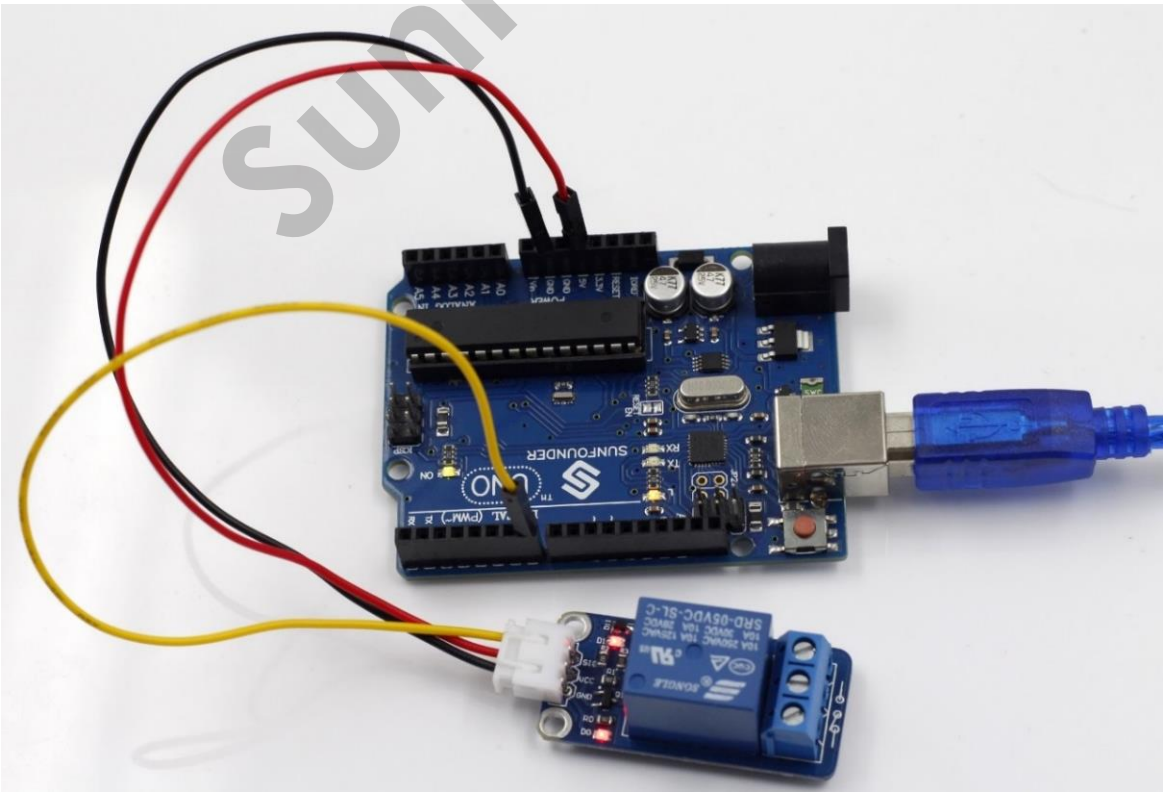

SunFounder

# Lesson 18 Stepper Motor

## Introduction

Stepper motors, due to their unique design, can be controlled to a high degree of accuracy without any feedback mechanisms. The shaft of a stepper, mounted with a series of magnets, is controlled by a series of electromagnetic coils that are charged positively and negatively in a specific sequence, precisely moving it forward or backward in small "steps".

There are two types of steppers, unipolars and bipolars, and it is very important to know which type you are working with. In this experiment, we will use a unipolar stepper.

SunFounder board or other MCUs cannot directly drive stepper motors. A driver circuit is necessary, so we use a stepper motor driver board (as shown in the following picture) to drive the stepper motor.

## Components

- 1 * SunFounder Uno board
- 1 * USB data cable
- 1 * Stepper Motor
- 1 * Stepper Motor Driver
- Several jumper wires

SunFounder

**Experimental Principle**

The stepper motor is a four-phase one, which uses a unipolarity DC power supply. As long as you electrify all phase windings of the stepper motor by an appropriate timing sequence, you can make the motor rotate step by step. The schematic diagram of a four-phase reactive stepper motor is as shown below:

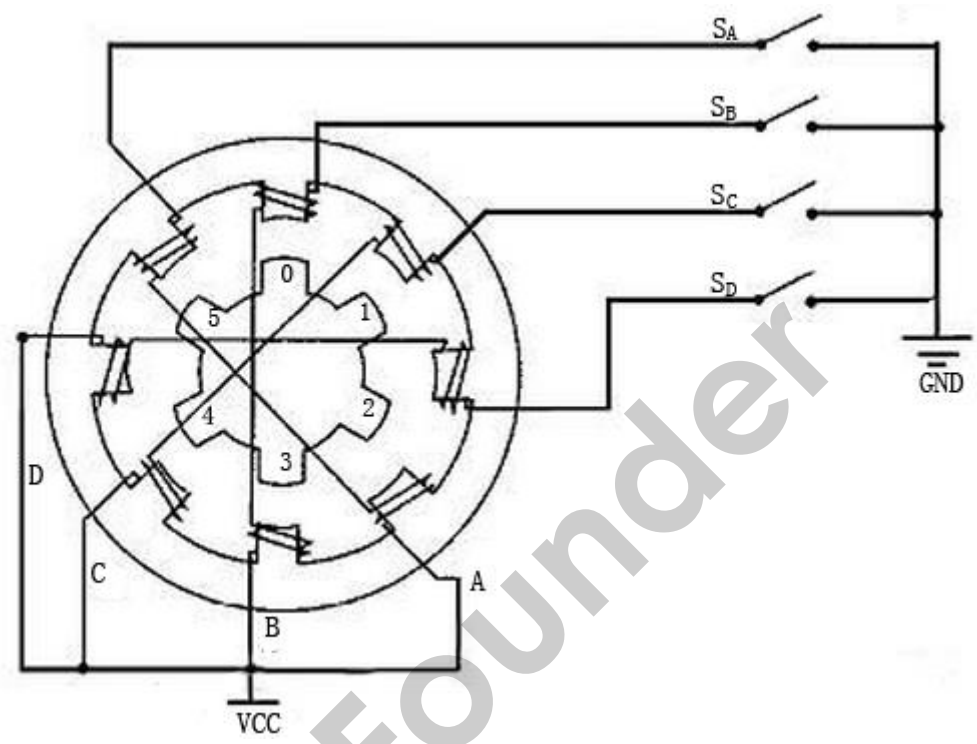


In the figure, in the middle of the motor is a rotor – a gear-shaped permanent magnet. Around the rotor, 0 to 5 are teeth. Then more outside, there are 8 magnetic poles, with each two opposite ones connected by coil winding. So they form four pairs from A to D, which is called a phase. It has four lead wires to be connected with switches $S_A$, $S_B$, $S_C$, and $S_D$. Therefore, the four phases are in parallel in the circuit, and the two magnetic poles in one phase are in series.

Here's how a 4-phase stepper motor works:

At the beginning, switch $S_B$ is power on, switch $S_A$, $S_C$, and $S_D$ is power off, and B-phase magnetic poles align with tooth 0 and 3 of the rotor. At the same time, tooth 1 and 4 generate staggered teeth with C- and D-phase poles. Tooth 2 and 5 generate staggered teeth with D- and A-phase poles. When switch $S_C$ is power on, switch $S_B$, $S_A$, and $S_D$ is power off, the rotor rotates under magnetic field of C-phase winding and that between tooth 1 and

SunFounder

4. Then tooth 1 and 4 align with the magnetic poles of C-phase winding. While tooth 0 and 3 generate staggered teeth with A- and B-phase poles, and tooth 2 and 5 generate staggered teeth with the magnetic poles of A- and D-phase poles. The similar situation goes on and on. Energize the A, B, C and D phases in turn, and the rotor will rotate in the order of A, B, C and D.

The four-phase stepper motor has three operating modes: single four-step, double four-step, and eight-step. The step angle for the single four-step and double four-step are the same, but the driving torque for the single four-step is smaller. The step angle of the eight-step is half that of the single four-step and double four-step. Thus, the eight-step operating mode can keep high driving torque and improve control accuracy. In this experiment, we let the stepper motor work in the eight-step mode.

To apply the motor in the circuit, a driver board needs to be used. Stepper Motor Driver-ULN2003 is a 7-channel inverter circuit. That is, when the input end is at high level, the output end of ULN2003 is at low level, and vice versa. If we supply high level to IN1, and low level to IN2, IN3 and IN4, then the output end OUT1 is at low level, and all the other output ends are at high level. So D1 lights up, switch $S_A$ is power on, and the stepper motor rotates one step. The similar case repeats on and on. Therefore, just give the stepper motor a specific timing sequence, it will rotate step by step. The ULN2003 here is used to provide particular timing sequences for the stepper motor.

The internal schematic diagram of the Stepper Motor Driver is as follows.

SunFounder

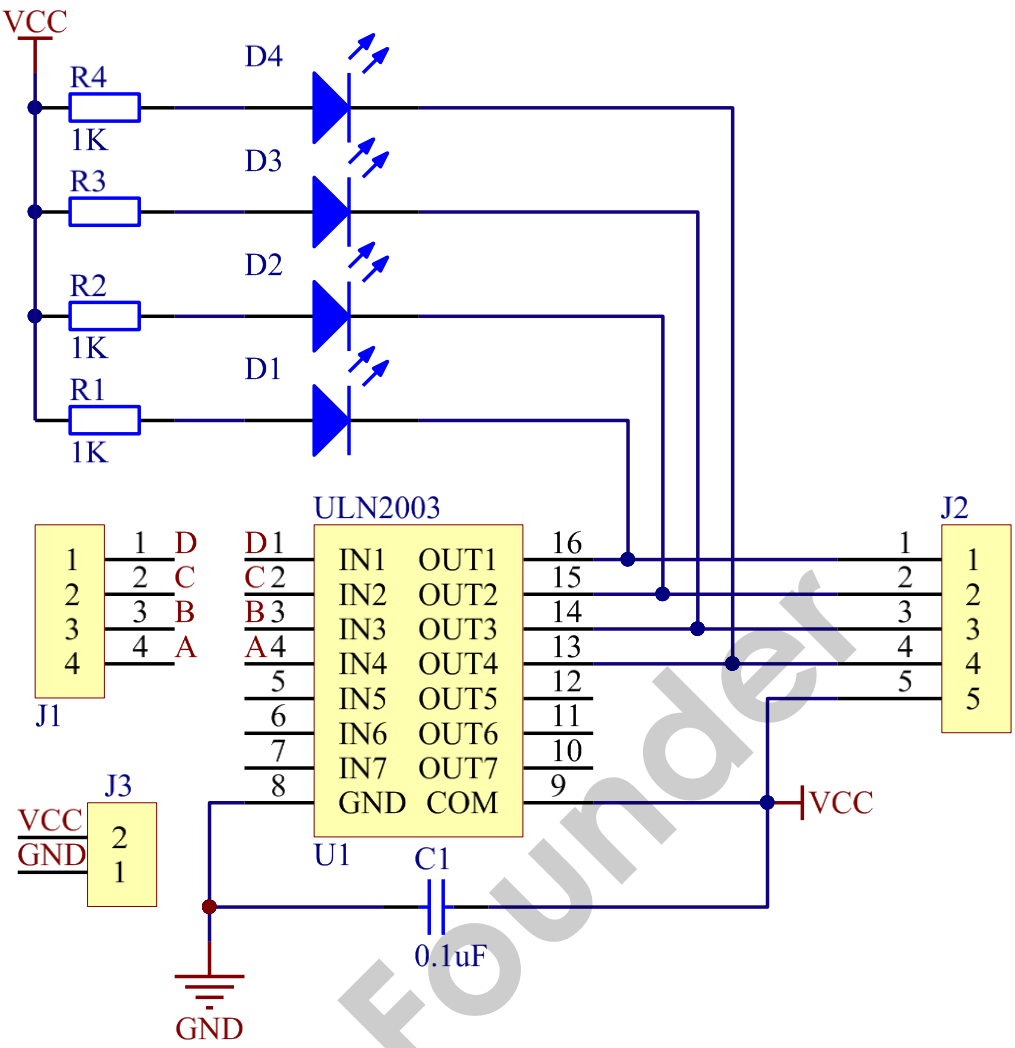


SunFounder

**Experimental Procedures**

**Step 1:** Build the circuit

The wiring between Stepper Motor Driver board and SunFounder Uno board:

| Stepper Motor Driver | SunFounder Uno |
|---|---|
| D | 11 |
| C | 10 |
| B | 9 |
| A | 8 |
| GND | GND |
| VCC | 5v |

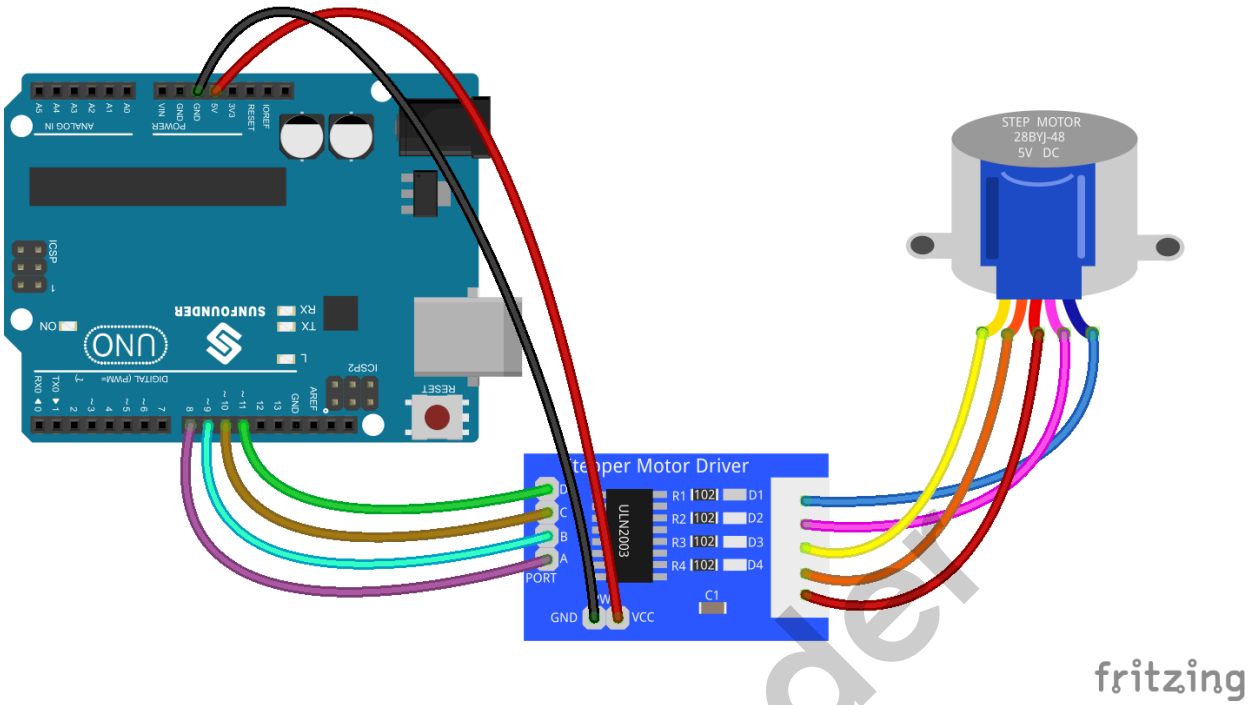


**Step 2:** Program (Please refer to the example code in LEARN -> Get Tutorials on our website)

**Step 3:** Compile the code

**Step 4:** Upload the sketch to the SunFounder Uno board

Now, you should see the rocker arm of the stepper motor spin clockwise and counterclockwise alternately.

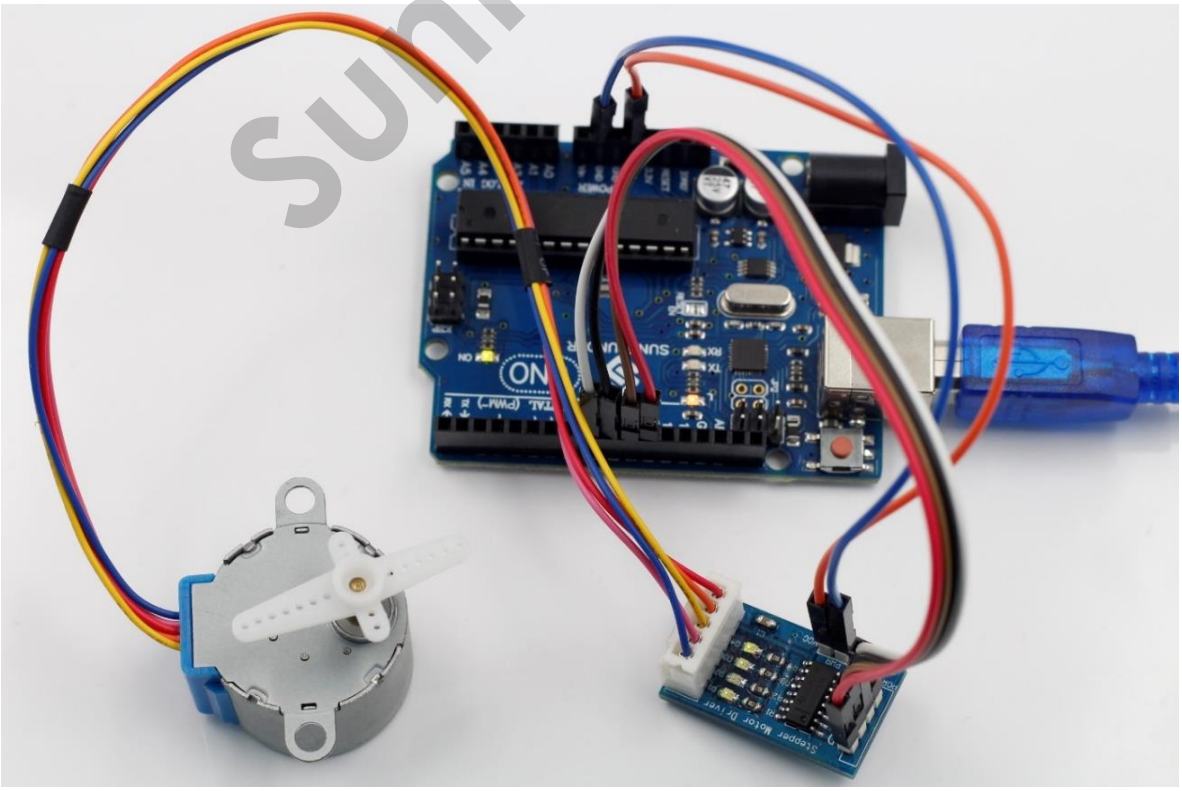

SunFounder

# Lesson 19 Servo

## Introduction

Servo is a type of geared motor that can only rotate 180 degrees. It is controlled by sending electrical pulses from your SunFounder board. These pulses tell the servo what position it should move to.

A servo has three wires: the brown wire is GND, the red one is VCC, and the orange one is signal line.

## Components

- 1* SunFounder Uno board
- 1 * USB data cable
- 1 * Servo
- Several jumper wires(M to M)

## Experimental Principle

### Servo

A servo is generally composed of the following parts: case, shaft, gear train, adjustable potentiometer, DC motor, and control circuit board.

It works like this: The SunFounder Uno board sends out PWM signals to the servo, and then the control circuit in the servo receives the signals through the signal pin and controls the motor inside to turn. As a result, the motor drives the gear chain and then motivates the shaft after deceleration. The shaft and adjustable potentiometer of the servo are connected together. When the shaft rotates, it drives the pot, so the pot outputs a voltage signal to the circuit board. Then the board determines the direction and speed of rotation based on the current position, so it can stop exactly at the right position as defined and hold there.

SunFounder

**Experimental Procedures**

**Step 1:** Build the circuit

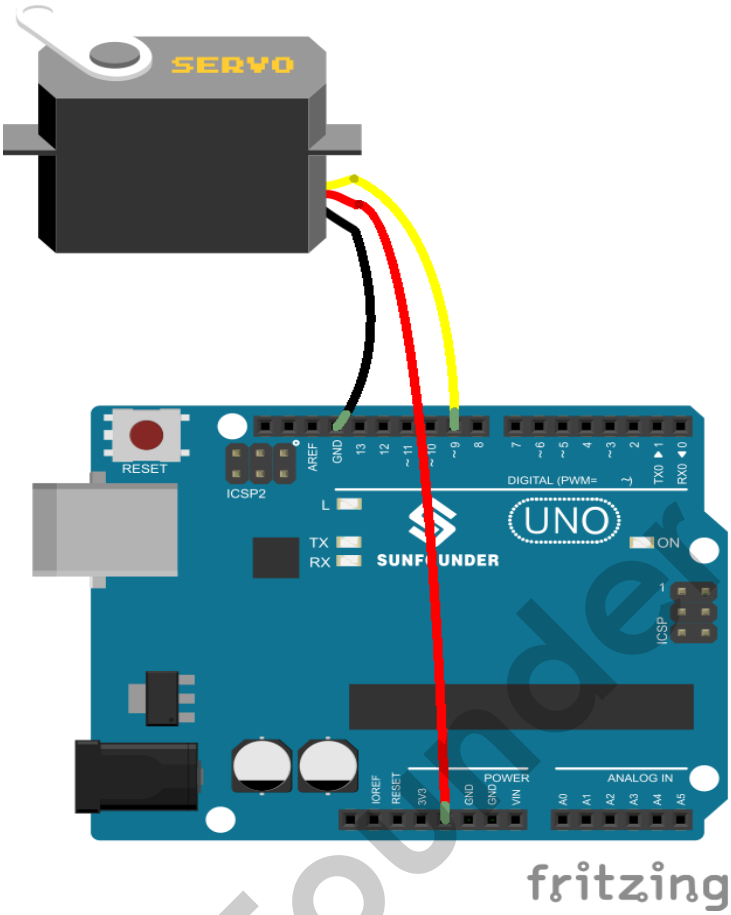


The schematic diagram

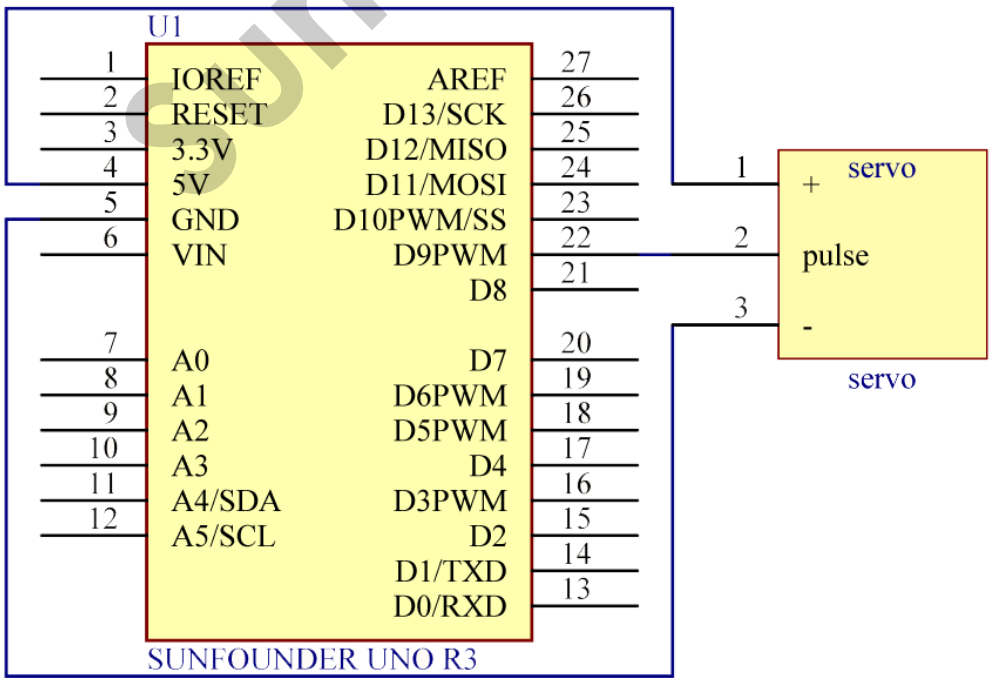


SunFounder

**Step 2:** Program (Please refer to the example code in LEARN -> Get Tutorials on our website)
**Step 3:** Compile the code
**Step 4:** Upload the sketch to the SunFounder Uno board

Now, you can see the rocker arm of the servo rotate and stop at 90 degrees (15 degrees each time). And then it rotates in the opposite direction.

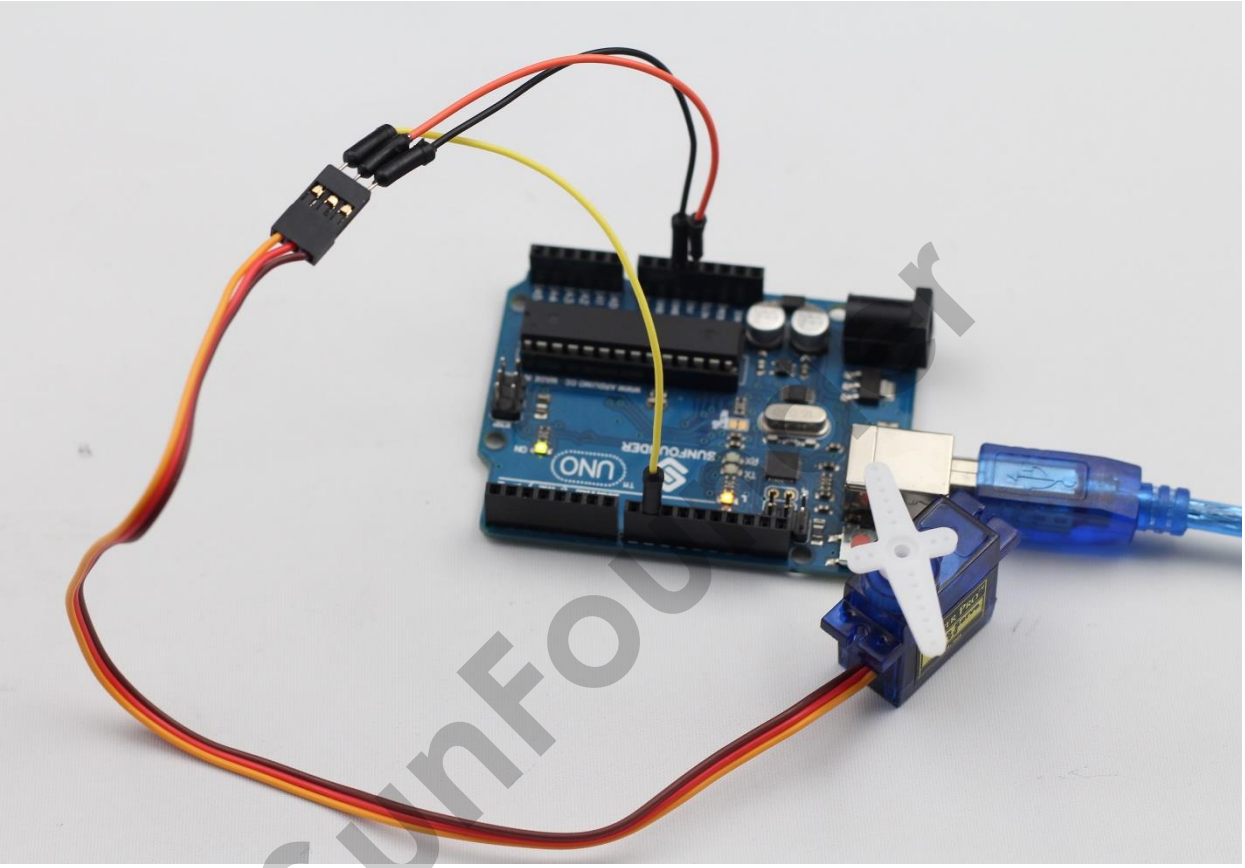


SunFounder

# Lesson 20 Joystick PS2

## Introduction

A joystick is an input device consisting of a stick that pivots on a base and reports its angle or direction to the device it is controlling. Joysticks are often used to control video games and robots. A Joystick PS2 is used here.

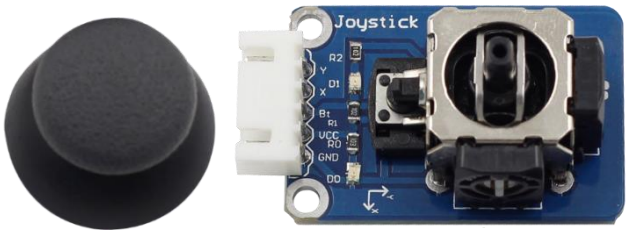


## Components

- 1 * SunFounder Uno board
- 1 * USB data cable
- 1 * Joystick PS2 module
- 1 * 5-Pin anti-reverse cable

## Experimental Principle

This module has two analog outputs (corresponding to **X** and **Y** coordinates) and one digital output representing whether it is pressed on Z axis.

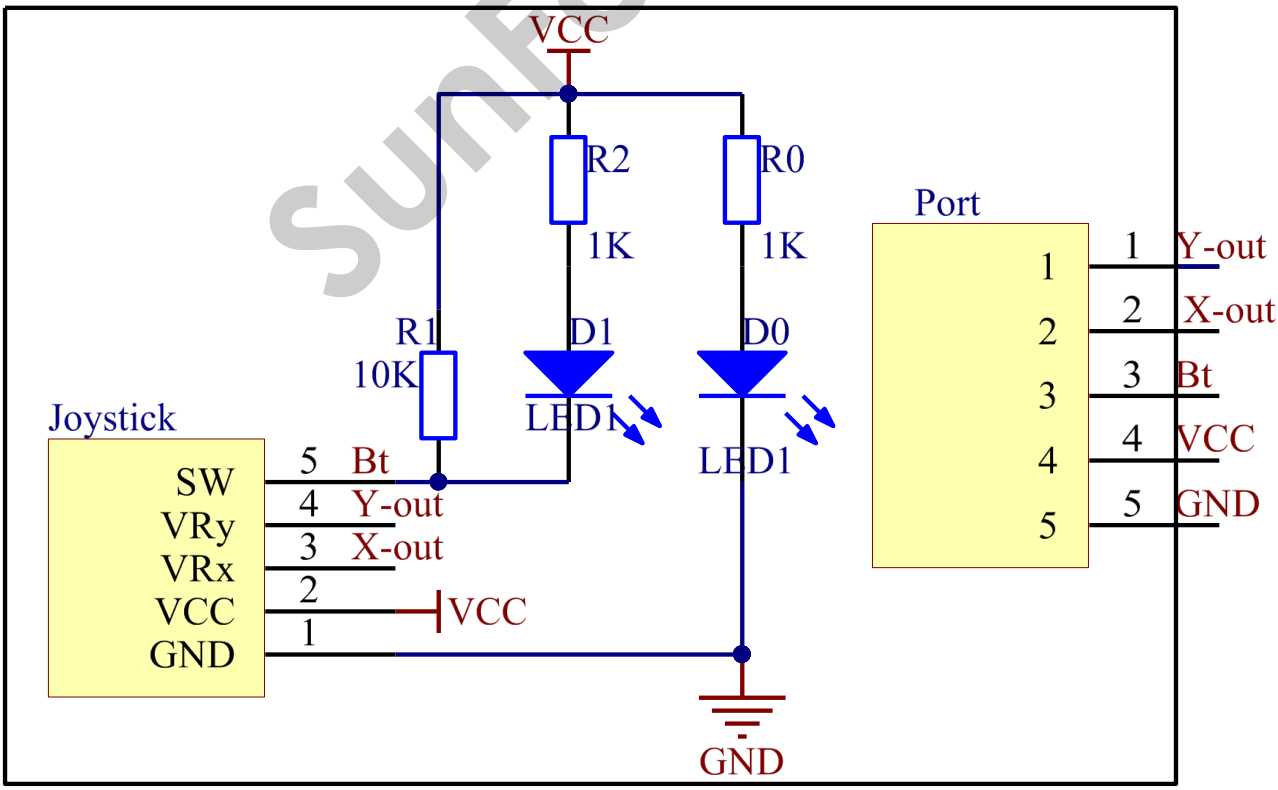


SunFounder

## Experimental Procedures

**Step 1:** Build the circuit
The wiring between the Joystick PS2 and SunFounder Uno board:

| Joystick PS2 | SunFounder Uno |
|---|---|
| GND | GND |
| VCC | 5V |
| Bt | 7 |
| x | A0 |
| y | A1 |

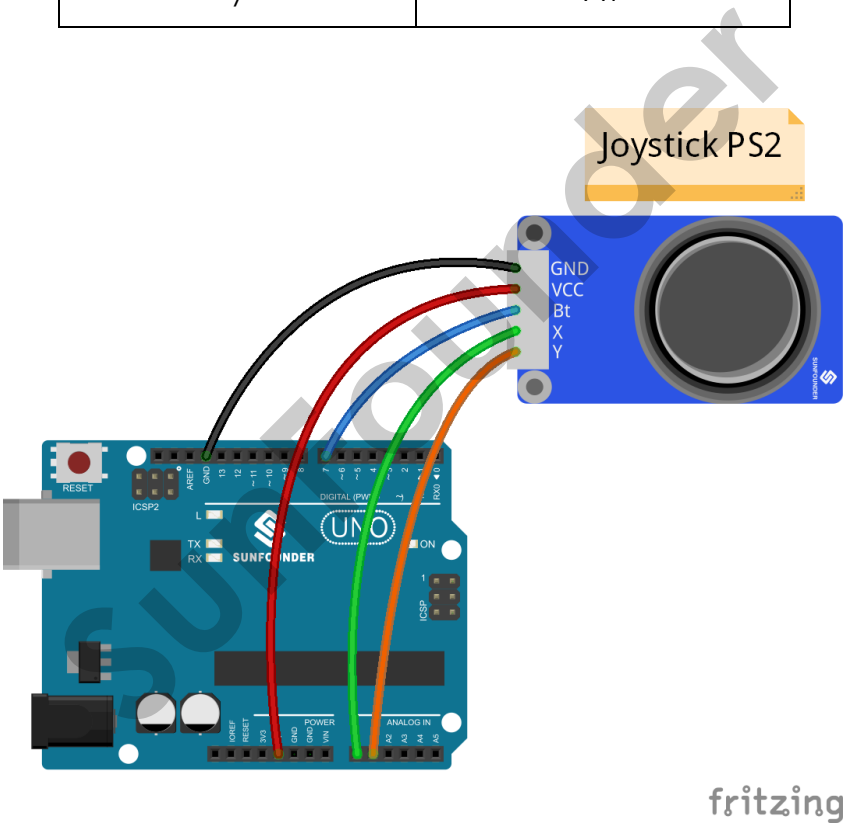


**Step 2:** Program (Please refer to the example code in LEARN -> Get Tutorials on our website)
**Step 3:** Compile the code
**Step 4:** Upload the sketch to the SunFounder Uno board

Now, push the joystick and the coordinates of X and Y axes displayed on Serial Monitor will change accordingly; press down the joystick, and the coordinate of Z=0 will also be displayed.

SunFounder

# Lesson 21 Infrared-Receiver

## Introduction

An infrared-receiver is a component which receives infrared signals and can independently receive infrared ray and output signals compatible with TTL level. It's similar with a normal plastic-packaged transistor in size and it is suitable for all kinds of infrared remote control and infrared transmission.

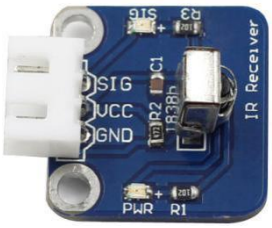

## Components

- 1 * SunFounder Uno board
- 1 * USB data cable
- 1 * Infrared-receiver module
- 1 * Remote controller
- 1 * 3-Pin anti-reverse cable

## Experimental Principle

Control a certain key (for example, Power key) via a remote controller by programming. When you press the key, infrared rays will be emitted from the remote control and received by the infrared receiver, and the LED on the SunFounder Uno board will light up. Connect an LED to pin 13 on the SunFounder Uno board so that you can see remotely whether the Power key is pressed down.

SunFounder

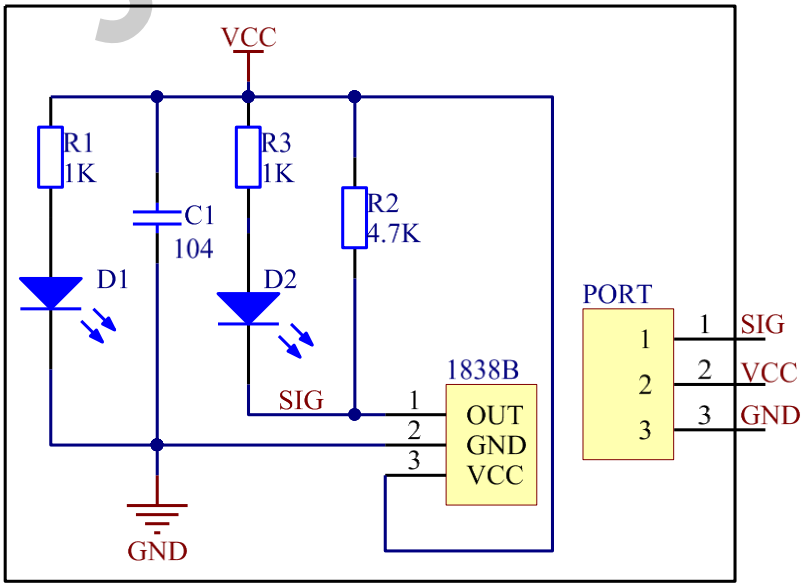

**Experimental Procedures**

**Step 1:** Build the circuit

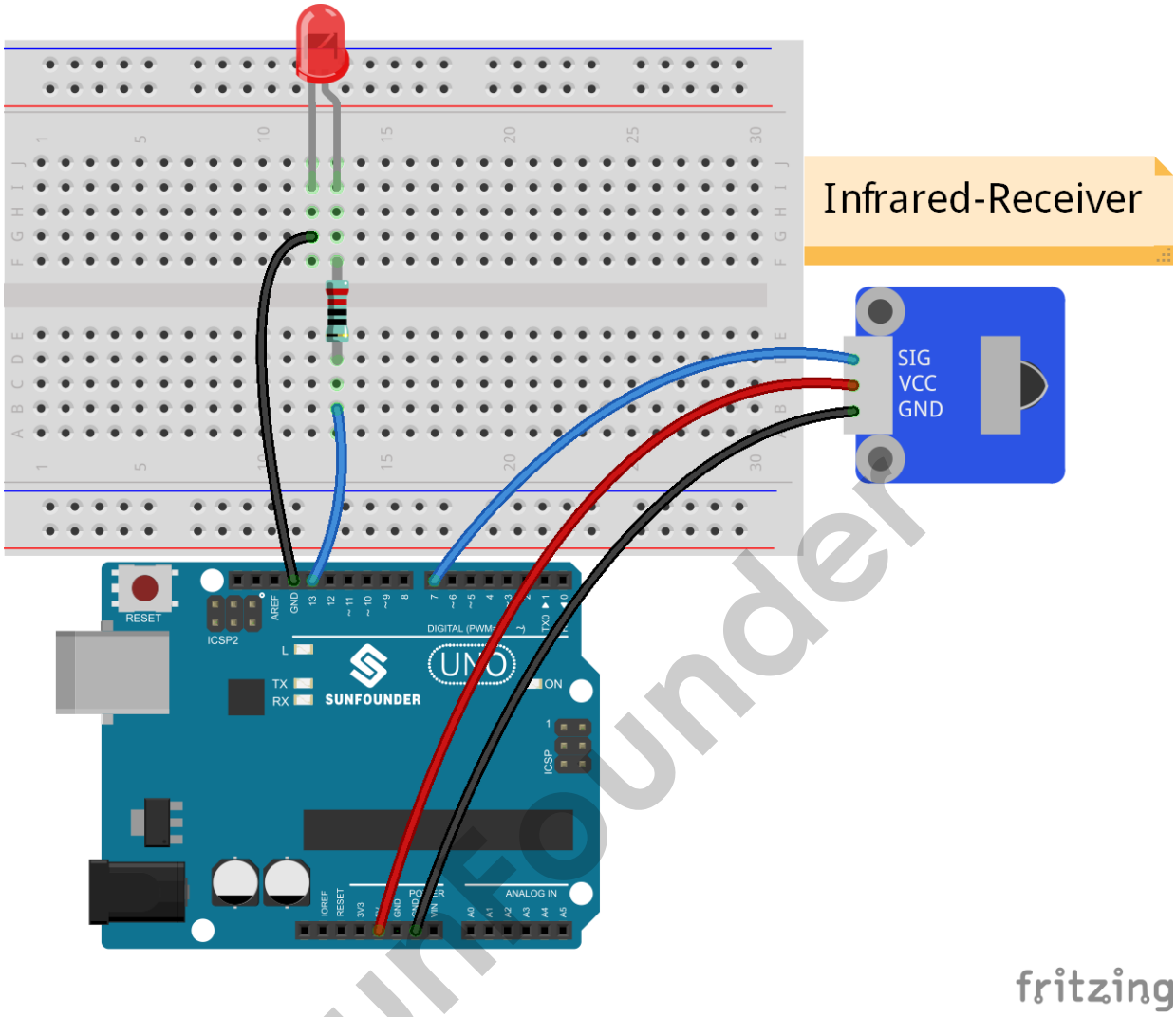


SunFounder

**Step 2:** Program (Please refer to the example code in LEARN -> Get Tutorials on our website)

***Note**: Here you need to add a library. Refer to the description in Lesson 4 previously in the manual.*

**Step 3:** Compile the code

**Step 4:** Upload the sketch to the SunFounder Uno board

Now, press the Power key of a remote control, and both the LED attached and that connected to pin 13 on the SunFounder Uno board will light up. Then press any other key, and the LEDs will go out.

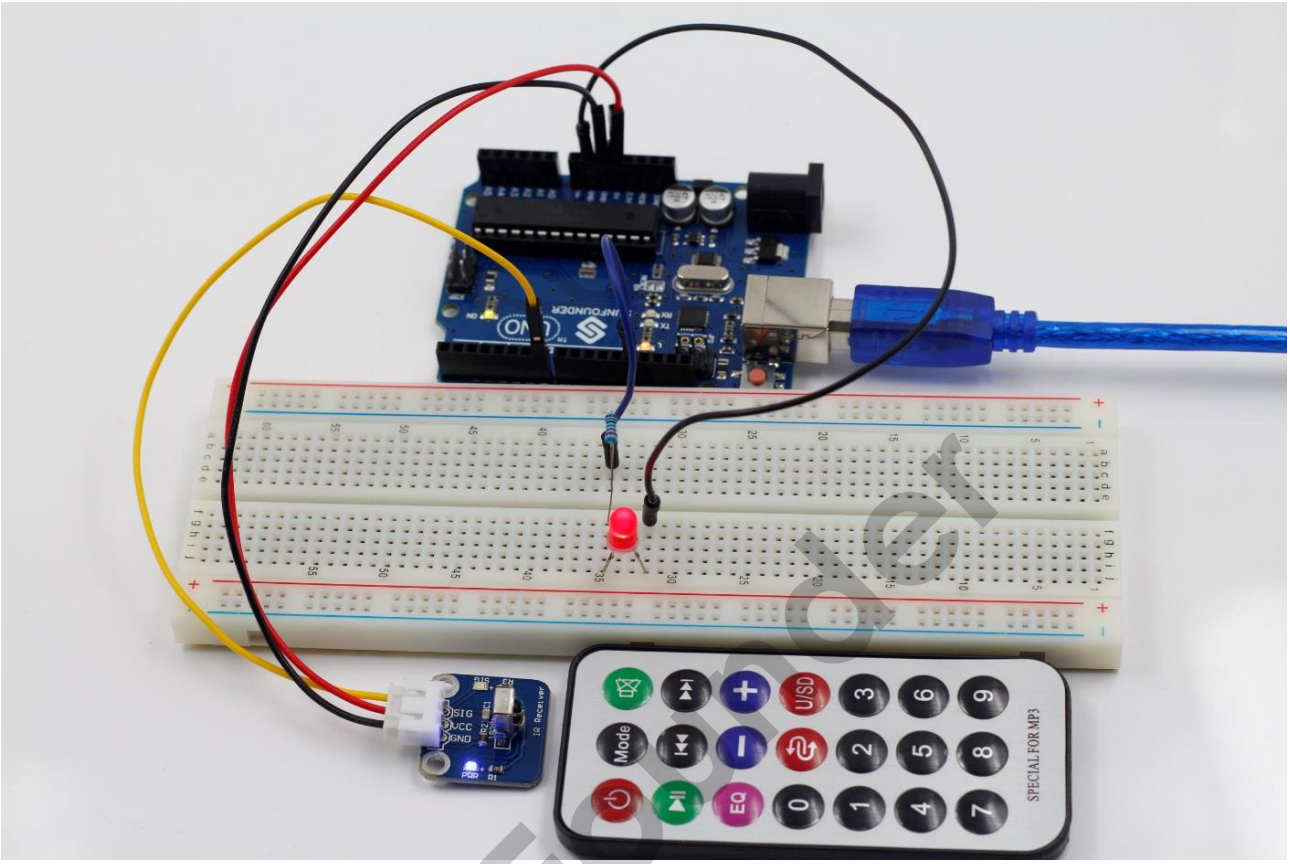


SunFounder

## For Safe Use

All parts and devices in this kit should be powered appropriately in compliance with relevant regulations and standards applicable in the country of intended use.

The connection of unapproved external devices to the modules/boards in this kit may affect compliance or result in damage to the unit, for which we will not be responsible.

To avoid malfunction or damage to your circuit boards, please observe the following:

DO NOT expose it to water/moisture or place it on a conductive surface whilst in operation.

DO NOT expose it to heat from any source; the product is designed for reliable operation at normal ambient room temperatures.

Take care whilst handling to avoid mechanical or electrical damage to the printed circuit board and connectors.

PLEASE perform the connection or wiring based on the instructions in the manual or our website if you are not clear of the results.

## Copyright Notice

All contents including but not limited to texts, images, and code in this manual are owned by the SunFounder Company. You should only use it for personal study, investigation, enjoyment, or other non-commercial or nonprofit purposes, under the related regulations and copyrights laws, without infringing the legal rights of the author and relevant right holders. For any individual or organization that uses these for commercial profit without permission, the Company reserves the right to take legal action.

SunFounder